The power behind competitiveness

Delta UPS Ultron Family

IPT Series, Three-Phase, 380/ 400/ 415 Vac

20/ 30/ 40/ 50/ 60/ 80/ 100/ 120/ 160/ 200 kVA

User Manual

www.deltaww.com

SAVE THIS MANUAL

This manual contains important instructions and warnings that you should follow during the installation, operation, storage and maintenance of this product. Failure to heed these instructions and warnings will void the warranty.

Copyright © 2026 by Delta Electronics Inc. All Rights Reserved. All rights of this User Manual ("Manual"), including but not limited to the contents, information, and figures are solely owned and reserved by Delta Electronics Inc. ("Delta"). The Manual can only be applied to the operation or the use of this product. Any disposition, duplication, dissemination, reproduction, modification, translation, extraction, or usage of this Manual in whole or in part is prohibited without the prior written permission of Delta. Given that Delta will continuously improve and develop the product, changes may be made to the information in this Manual at any time without obligation to notify any person of such revision or changes. Delta will make all possible efforts to secure the accuracy and the integrity of this Manual. Delta disclaims any kinds or forms of warranty, guarantee, or undertaking, either expressly or implicitly, including but not limited to the completeness, faultlessness, accuracy, non-infringement, merchantability or fitness for a particular purpose of the Manual.

Table of Contents

SAVE THIS MANUAL **2**

Chapter 1 : Important Safety Instructions **7**

1.1 Installation Warnings 7
1.2 Connection Warnings 8
1.3 Usage Warnings 9
1.4 Storage Warnings 11
1.5 Cybersecurity Warnings 11
1.6 Standard Compliance 12

Chapter 2 : Introduction **13**

2.1 General Overview 13
2.2 Technical Specifications 13
2.3 Package Inspection 16
2.4 Functions & Features 24
2.5 Exterior & Dimensions 25
2.6 Front View 29
2.7 Internal View 31
2.8 Tri-color LED Indicator & Buzzer 33

Chapter 3 : Operation Modes **36**

3.1 On-Line Mode 37
3.2 Battery Mode 38
3.3 Bypass Mode 39
3.4 Manual Bypass Mode 40
3.5 ECO Mode 41
3.6 Frequency Conversion Mode 42

Chapter 4 : Communication Interfaces **43**

4.1 Communication Interfaces (I): on the Front of the UPS with Its Front Door Open 44

4.1.1 Display Port 44
4.1.2 Parallel Ports 45
4.1.3 RS-232 Port & USB Port 45
4.1.4 REPO Dry Contacts 46
4.1.5 External Battery Temperature Detection 47
4.1.6 Input Dry Contacts 47
4.1.7 Output Dry Contacts 49
4.1.8 Backfeed Shunt Trip Function 51
4.1.9 Battery Breaker Status Dry Contacts 52
4.1.10 External RS-485 Port 52
4.1.11 Battery Start Button 53
4.2 Communication Interfaces (II): at the Rear of the Touch Panel 53
4.3 Cable Routing for the Communication Interfaces 54

Chapter 5 : Installation and Wiring 59

5.1 Before Installation and Wiring 59
5.2 Installation Environment 59
5.3 Transportation 61
5.4 Installation 62
5.4.1 Single Unit Installation 62
5.4.2 Parallel Units Installation 68
5.5 Wiring 72
5.5.1 Pre-wiring Warnings 72
5.5.2 Single Input and Dual Input Modification 78
5.5.3 Single Unit Wiring 80
5.5.3.1 Single Input (Single Unit) 81
5.5.3.2 Dual Input (Single Unit) 86
5.5.4 Parallel Units Wiring 87
5.6 External Battery Cabinet Connection Warnings 89
5.7 Installation of Rodent Shields 98

Chapter 6 : Operation 103

6.1 Pre Start-up & Pre Turn-off Warnings 103

6.2 Start-up Procedures 104
6.2.1 On-Line Mode Start-up Procedures 104
6.2.2 Battery Mode Start-up Procedures 105
6.2.3 Bypass Mode Start-up Procedures 106
6.2.4 Manual Bypass Mode Start-up Procedures 107
6.2.5 ECO Mode Start-up Procedures 109
6.2.6 Frequency Conversion Start-up Procedures 111
6.3 Turn-off Procedures 113
6.3.1 On-Line Mode Turn-off Procedures 113
6.3.2 Battery Mode Turn-off Procedures 114
6.3.3 Bypass Mode Turn-off Procedures 114
6.3.4 Manual Bypass Mode Turn-off Procedures 115
6.3.5 ECO Mode Turn-off Procedures 115
6.3.6 Frequency Conversion Mode Turn-off Procedures 115
6.4 Start-up & Turn-off Procedures for Parallel Units 116

Chapter 7 : LCD Display & Settings 118

7.1 LCD Display Hierarchy 118
7.2 How to Turn on the LCD 122
7.3 Introduction of Touch Panel and Function Keys 123
7.4 Password Entry 128
7.5 Check Kilowatt-Hour 129
7.6 UPS Settings 131
7.6.1 Bypass Setting 131
7.6.2 Mode Setting 131
7.6.3 Input & Output Setting 132
7.6.4 Battery & Charging Setting 133
7.6.5 Parallel Setting 135
7.6.6 Dry Contact Setting 136
7.6.7 General Setting 138
7.6.8 Net Setting 139
7.6.9 Net Notification 143
7.6.10 Control 144
7.7 System Maintenance 144

7.7.1 Warning 144
7.7.2 Historical Event 145
7.7.3 Statistics 145
7.7.4 Test 146
7.7.5 Clear 146
7.7.6 Advanced Diagnosis 146
7.7.7 Version & S/N 147

Chapter 8 : Optional Accessories 148

8.1 EMS Function on the LCD Screen 149
8.2 MFC Function on the LCD Screen 153

Chapter 9 : Maintenance 155

Chapter 10 : Warranty 156

Chapter 1 : Important Safety Instructions

1.1 Installation Warnings

- This is a three-phase on-line uninterruptible power supply (hereafter referred to as 'UPS'). It can be used for commercial and industrial applications.
- Install the UPS in a well-ventilated area, away from excess moisture, heat, dust, flammable gas or explosives. To avoid fire accidents and electric shock, the indoor area must be free of conductive contaminants. For the temperature and humidity specifications, please refer to *2.2 Technical Specifications*.
- Leave adequate space around all sides of the UPS for proper ventilation and maintenance. Please refer to *5.2 Installation Environment*.
- Only authorized Delta engineers or service personnel can perform installation and maintenance. If you want to install the UPS by yourself, please install it under the supervision of authorized Delta engineers or service personnel.
- Do not drill holes on the UPS. Drilling operations must be approved by the Delta's Field Service Representative (FSR) department in advance. Failure to heed these instructions and warnings will void the warranty.
- Do not step, stand, or sit on the UPS; otherwise, personal injury and/ or equipment damage may occur.
- Follow the drilling instructions listed below:

  1. **Removal of All Relevant Cover Plates**
     Before performing any drilling, remove all relevant cover plates from the equipment chassis. Never drill a plate directly while it is attached to the chassis.
  2. **External Drilling Only**
     All drilling operations must be performed outside the equipment room (or in a designated clean area). Carrying out these tasks in a separate workshop or outdoor environment ensures that metal shavings, dust and debris do not become airborne near the active machinery.
  3. **Prevention of Foreign Object Debris (FOD)**
     Electronics inside the UPS are highly susceptible to foreign object debris (FOD) because metal fragments are conductive. Even if microscopic metal shavings enter the equipment, it can cause the following issues.
     - Short circuits across high-voltage terminals
     - Intermittent signal interference on logic boards
     - Cooling fan failure or mechanical blockages

WARNING:
Failure to (1) remove relevant cover plates and (2) drill in a controlled environment outside the equipment room will void the warranty and cause immediate equipment failure upon power-up.

- Follow the IEC 60364-4-42 standard to install the UPS.

1.2 Connection Warnings

- Before applying electrical power to the UPS, make sure that the UPS is grounded to avoid a possible risk of current leakage.
- You can parallel a maximum of eight UPS units.
- The UPS must be connected to an external battery cabinet (user-supplied, handled and configured by Delta service personnel). Please refer to *5.6 External Battery Cabinet Connection Warnings* for relevant information.
- It is necessary to connect the protective devices to the UPS when the UPS is connected to power sources and critical loads.
- The protective devices connected to the UPS must be installed near the UPS and easily accessible for operation.
- Protective Devices:
  1. For single input, you must install (1) a protective device between the main AC source and the UPS and (2) a protective device between the connected critical loads and the UPS.
  2. For dual input, you must install (1) a protective device between the main AC source and the UPS, (2) a protective device between the bypass source and the UPS and (3) a protective device between the connected critical loads and the UPS.
  3. For grounding information, please refer to *Figure 5-31* and *Figure 5-34*.
  4. The recommended electrical rating of the input, output and backfeed protection devices are as follows. Application of the protective devices shall be in accordance with local installation codes.

20kVA/ 18kW	30kVA/ 27kW	40kVA/ 36kW	50kVA/ 45kW	60kVA/ 54kW
600 V/ 50 A	600 V/ 75 A	600 V/ 100 A	600 V/ 100 A	600 V/ 160 A
80kVA/ 72kW	**100kVA/ 90kW**	**120kVA/ 108kW**	**160kVA/ 144kW**	**200kVA/ 180kW**
600 V/ 160 A	600 V/ 225 A	600 V/ 225 A	600 V/ 400 A	600 V/ 400 A

  5. Each protective device should have the functions of overcurrent protection, short circuit protection, insulating protection and shunt trip feature.

6. When selecting the protective devices, please take each power cable's current capacity and the system's overload capacity (please refer to ***2.2 Technical Specifications***) into consideration. Besides, the short-circuit capacity of the upstream protective devices must be equal to or larger than the capacity of the UPS's input protective devices.
7. Due to abnormalities in the UPS, the fault current may reach 20 kA. At the time, the UPS's internal semi-conductor fuses will take 8 ~ 10 ms to open. Thus, the reaction time of the upstream*[1] protective devices must be more than 10 ms so that the fuses would have sufficient time to interrupt the fault current, and the UPS's bypass will be able to keep supplying power to the loads.

   NOTE:
   *[1] For dual input application, this refers to the bypass upstream.

8. If the UPS is supplied by a power source whose neutral is grounded, each protective device must be a 3-pole type. If the UPS is supplied by a power source whose neutral is not grounded, each protective device must be a 4-pole type.

1.3 Usage Warnings

- Only qualified service personnel can upgrade the UPS's firmware.
- Before installation, wiring and working on the UPS's internal circuits, please completely cut off all power supplied to the UPS, including the input power and battery power.
- The UPS is specifically designed for information technology equipment and used to power computers, servers, and associated peripheral devices. If you want to connect any capacitive loads or non-linear loads (that have serious surge current) to the UPS, it needs to be de-rated according to on-site applications. For such special applications, please contact Delta service personnel for the accurate UPS sizing. The UPS is not suitable for connecting to any asymmetrical loads. For the load suitability, please contact Delta customer service before purchasing.
- The external slits and openings in the UPS are provided for ventilation. To ensure reliable operation of the UPS and to protect the UPS from overheating, these slits and openings must not be blocked or covered. Do not insert any object into the slits and openings that may hinder ventilation.
- Before applying electrical power to the UPS, you must allow the UPS to adjust to room temperature 20 ~ 25°C (68 ~ 77°F) for at least one hour and ensure that there is no moisture condensing inside the unit.
- Do not put beverages on the UPS, external battery cabinet(s) or any other accessory associated with the UPS.

- Do not open or remove the covers or panels of the UPS to avoid high-voltage electric shock. Only authorized Delta engineers or service personnel can do so for installation or maintenance. If you want to open or remove the covers or panels, do it only under the supervision of authorized Delta engineers or service personnel.
- If the UPS will be connected to regenerative loads (such as lifts, CNC (Computer Numerical Control) machines, or motors), please contact Delta customer service prior to purchase.
- The risk of dangerous high voltage is possible when batteries are still connected to the UPS even though the UPS is disconnected from the power sources. Before maintenance of the UPS, turn off each external battery cabinet's circuit breaker to completely cut off the battery power from the UPS.
- Do not dispose of the battery or batteries in a fire. The batteries may explode.
- Do not open or damage the battery or batteries. The released electrolyte is harmful to the skin and eyes and may be toxic.
- The UPS is electronic equipment that runs 24 hours continuously. To ensure its normal lifetime, regular maintenance of the UPS and batteries is of vital importance and necessary.
- Some components like batteries, power capacitors, and fans will become worn-out due to long-term usage, and this will increase the risk of UPS failure. To replace and maintain the components, please contact Delta service personnel.
- A battery can present a risk of electrical shock and high short-circuit current. Contact with any part of a grounded battery can result in electrical shock. Please observe the following precautions when working on batteries:
  1. Remove watches, rings, or other metal objects.
  2. Use tools with insulated handles.
  3. Wear rubber gloves and boots.
  4. Do not lay tools or metal parts on top of the batteries.
  5. Disconnect charging source and loads prior to installing or maintaining the batteries.
  6. Remove battery grounds before installation and maintenance to reduce likelihood of shock. Remove the connection from ground if any part of the battery is determined to be grounded. Please note that the battery grounds mean any battery pole (+/ -) connecting to the ground.
- You must contact Delta customer service if any of the following events occur.
  1. Any liquid is poured or spilled on the UPS.
  2. The UPS is deformed.
  3. Any conductive powders or metals enter into the UPS.
  4. The UPS does not run normally after you carefully follow the instructions in this *User Manual*.

1.4 Storage Warnings

- Use the original packing materials to pack the UPS to prevent any possible damage from rodents.
- If the UPS needs to be stored prior to installation, it should be placed in a dry indoor area. The allowable storage temperature is below 70°C (158°F) and relative humidity is below 95%.

1.5 Cybersecurity Warnings

- **Cybersecurity**

  1. Before using this product, please read the ***Cybersecurity Guidelines*** thoroughly to complete the relevant cybersecurity configurations.
  2. Download Path:

     A. Scan the QR code below to visit the **Download Center**:
     https://downloadcenter.deltaww.com/en-US/DownloadCenter

     Download Center

     B. Select the product category or enter the product model number to download the ***Cybersecurity Guidelines*** from the document list.

- **Product Support Period**

  1. During the support period, cybersecurity vulnerability remediation services are continuously provided for this product. After the support period expires, cybersecurity patches and updates will no longer be released. If the product remains in operation after expiration, users are advised to evaluate appropriate compensatory cybersecurity controls to maintain overall system security.
  2. Product Support Period Inquiry:

     A. Scan the QR code below to visit the inquiry page:
     https://www.deltaww.com/en-US/service-support/contact-us

     Product Support Period

B. Select "Product Support Period" from the drop-down menu and fill in the required fields.

- **Product Cybersecurity Vulnerability Reporting**

1. If you discover any potential cybersecurity vulnerabilities or anomalies while using this product, please report them through our official cybersecurity vulnerability reporting channel. To protect the confidentiality of vulnerability information, please do not transmit unencrypted vulnerability details via general customer service email or telephone. Delta's prior permission is required before you disclose any vulnerability information on public forums, social media platforms or other public channels.
2. Delta Product Cybersecurity Vulnerability Reporting Channel:

   Scan the QR code below to visit the reporting page:
   https://www.deltaww.com/en-US/service-support/product-cybersecurity/vulnerability-management-policy

Vulnerability Reporting

1.6 Standard Compliance

- EN 62040-1
- EN 62040-2 Category C3
- EN 61000-4-2 Level 4
- EN 61000-4-3 Level 3
- EN 61000-4-4 Level 4
- EN 61000-4-5 Level 4
- EN 61000-4-6

Chapter 2 : Introduction

2.1 General Overview

The IPT series UPS, a three-phase Industrial Power Transformer-based uninterruptible power supply (hereafter referred to as 'UPS') is a dedicated design for large scale power systems such as transportation power systems, financial institutions, communication systems, network rooms, hospitals, monitoring, safety, and emergency systems as well as mission-critical facilities. The unit not only adopts advanced IGBT technology to provide high quality, low noise, pure and uninterruptible output power to the connected loads but also applies the latest design of DSP digital control technology and highest quality components.

2.2 Technical Specifications

Model		IPT-20K	IPT-30K	IPT-40K	IPT-50K	IPT-60K	IPT-80K	IPT-100K	IPT-120K	IPT-160K	IPT-200K
Power Rating	kVA/kW	20kVA/ 18kW	30kVA/ 27kW	40kVA/ 36kW	50kVA/ 45kW	60kVA/ 54kW	80kVA/ 72kW	100kVA/ 90kW	120kVA/ 108kW	160kVA/ 144kW	200kVA/ 180kW
	Parallel Configuration	Up to 8 units									
Input	Nominal Voltage	220/ 380, 230/ 400, 240/ 415 Vac									
	Phase/Wire	3P4W + PE/ 3P3W + PE									
	Voltage Range	187 ~ 276 Vac (Ph-N, 100% load) 324 ~ 477 Vac (Ph-Ph, 100% load) 165 ~ 187 Vac (Ph-N, 70 ~100% load) 286 ~ 324 Vac (Ph-Ph, 70~100% load)									
	Frequency Range	40 ~ 70 Hz									
	Total Harmonic Distortion (THDi)	< 3 %									
	Power Factor (100% load)	> 0.99									
	Connection	Single or dual feed									
	Cable Entry	Bottom									
Bypass	Overload Capability	≤ 110: 60 minutes; 111 ~ 125%: 10 minutes; 126 ~ 150%: 1 minute; > 150%: 1 second									

Model		IPT-20K	IPT-30K	IPT-40K	IPT-50K	IPT-60K	IPT-80K	IPT-100K	IPT-120K	IPT-160K	IPT-200K
Output	Nominal Voltage	220/ 380, 230/ 400, 240/ 415 Vac									
	Voltage Regulation	± 1% (static), ± 3% (dynamic)									
	Frequency	50/ 60 Hz ± 0.05 Hz									
	Total Harmonic Distortion (THDv)	< 2% (linear load) < 5% (non-linear load)									
	Power Factor	0.9									
	Permitted Load Power Factor	0.8 leading to 0.7 lagging without derating									
	Overload Capability	≤110: 60 minutes; 111 ~ 125%: 10 minutes; 126 ~ 150%: 1 minute; > 150%: 1 second									
	Short-circuit Current (RMS)	200 A, 200 ms	200 A, 200 ms	300 A, 200 ms	300 A, 200 ms	390 A, 200 ms	390 A, 200 ms	510 A, 200 ms	510 A, 200 ms	930 A, 200 ms	930 A, 200 ms
	Phase Angle Accuracy w/ Balanced Loads	120 ± 1°									
	Phase Angle Accuracy w/ Unbalanced Loads	120 ± 3°									
	Range of Frequency Synchronized with Bypass	50/ 60 Hz ± 5 Hz									
	Current Crest Ratio	3 : 1									
Efficiency	Online Mode	Up to 90.0%	Up to 90.8%	Up to 92.5%		Up to 93.5%		Up to 94.5%		Up to 94.0%	
	ECO Mode	Up to 94.0%	Up to 96.5%	Up to 96.5%		Up to 97.5%		Up to 97.5%		Up to 97.5%	
	Battery Mode	Up to 89.0%	Up to 91.5%	Up to 91.5%		Up to 93.0%		Up to 93.5%		Up to 93.0%	

Model		IPT-20K	IPT-30K	IPT-40K	IPT-50K	IPT-60K	IPT-80K	IPT-100K	IPT-120K	IPT-160K	IPT-200K
Battery	Battery Quantity	36 ~ 44 PCS									
	Battery Nominal Voltage	480 Vdc									
	Battery Operational Voltage Limits	346 ~ 638 Vdc									
	Maximum Charge Current	11 A	13 A	15 A	17 A	23 A	30 A	38 A	45 A	60 A	75 A
Communication Interfaces	Display	10-inch color LCD touchscreen									
	Ports	USB port × 1, RS-232 × 1, Input dry contact × 4, Output dry contact × 6, Network port × 1, REPO × 1, Modbus (RS-485) × 1,									
	REPO (Emergency Power Off)	Standard									
	Protocols	SNMP, Modbus RTU, Modbus TCP/IP, HTTP(S), SNTP, SMTP, DHCP									
Physical	Dimensions (W × D × H)	600 × 830 × 1420 mm (23.6'' × 32.7'' × 55.9'')		600 × 830 × 1420 mm (23.6'' × 32.7'' × 55.9'')		600 × 830 × 1420 mm (23.6'' × 32.7'' × 55.9'')		800 × 830 × 1570 mm (31.5'' × 32.7'' × 61.8'')		1200 × 830 × 1700 mm (47.2" × 32.7" × 66.9")	
	Net Weight	336 kg (740.8 lb)		404 kg (890.7 lb)		456.5 kg (1006.4 lb)		593 kg (1307.3 lb)		1200 kg (2645.5 lb)	
	Ventilation	Front to top									
	Service Access	Front and top									
Environment	Operating Temperature	0 ~ 40°C (32 ~ 104°F)									
	Humidity	0 ~ 95% (non-condensing)									
	Audible Noise	< 78 dBA*[1]									
	Altitude	0 ~ 2000 m (0 ~ 6562 ft) (derating 1% per 100 m (328.08 ft) from 1000 m (3280.84 ft) to 2000 m (6562 ft)									

Model		IPT-20K	IPT-30K	IPT-40K	IPT-50K	IPT-60K	IPT-80K	IPT-100K	IPT-120K	IPT-160K	IPT-200K
Environment (continued)	Storage Temperature	-20 ~ 70°C (-4 ~ 158°F)									
	Storage Humidity	0 ~ 95% (non-condensing)									
	Ingress Protection Level	IP20, IP43 (optional)									
Conformance	IEC Pollution Degree (PD)	PD 2									
	Over Voltage Category (OVC)	OVC III									
	Type of System Earthing	TN-S, TN-C, TN-C-S									
	Safety	IEC 62040-1, CE									
	EMC	IEC 62040-2									
	Performance	IEC 62040-3									
	Sustainability	RoHS, REACH									

NOTE:

1. *[1] At a distance of 1 m (3.28 ft) in front of the UPS.
2. Please refer to the rating label for the safety certification.
3. All specifications are subject to change without prior notice.

2.3 Package Inspection

During UPS transportation, some unpredictable situations might occur. It is recommended that you inspect the UPS exterior packaging. If you notice any damage, please immediately contact the dealer from whom you purchased the unit.

Please check if any item is missing according to the following package list. If the UPS needs to be returned, carefully repack the UPS and all of the accessories using the original packing materials that came with the unit.

20/ 30/ 40/ 50kVA UPS

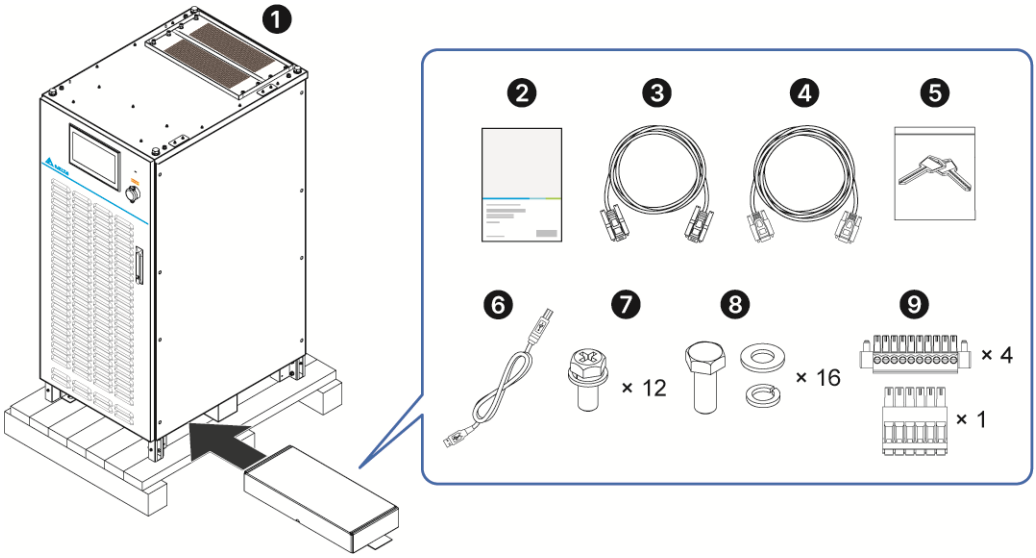

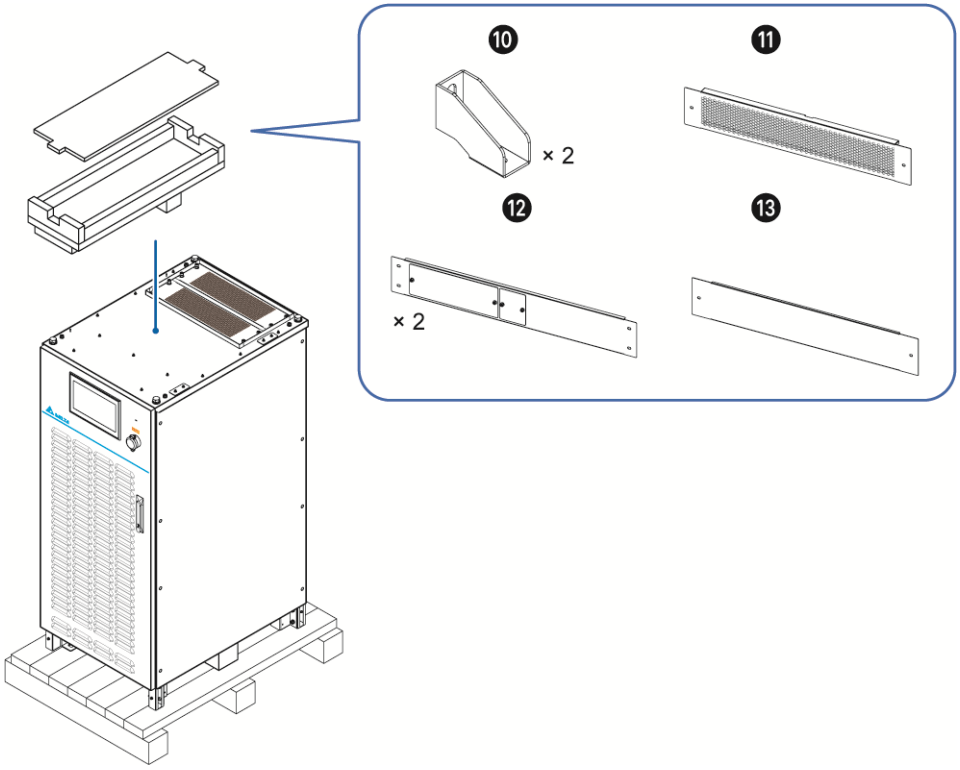

No.	Item	Q'ty
❶	UPS	1 PC
❷	User Manual	1 PC
❸	RS-232 Cable	1 PC
❹	Parallel Cable (length: 5 m (196.85"))	1 PC
❺	Key	2 PCS
❻	USB Cable	1 PC
❼	M5 Screw (used for rodent shields)	12 PCS
❽	M8 Screw, Flat Washer and Spring Washer (used for input, output, bypass, neutral, battery and grounding wiring)	16 PCS
❾	Terminal Block (10-pin)	4 PCS
	Terminal Block (6-pin)	1 PC
❿	Wall Bracket	2 PCS
⓫	Rodent Shield_ Front	1 PC
⓬	Rodent Shield_ Lateral	2 PCS
⓭	Rodent Shield_ Rear	1 PC

60/ 80kVA UPS

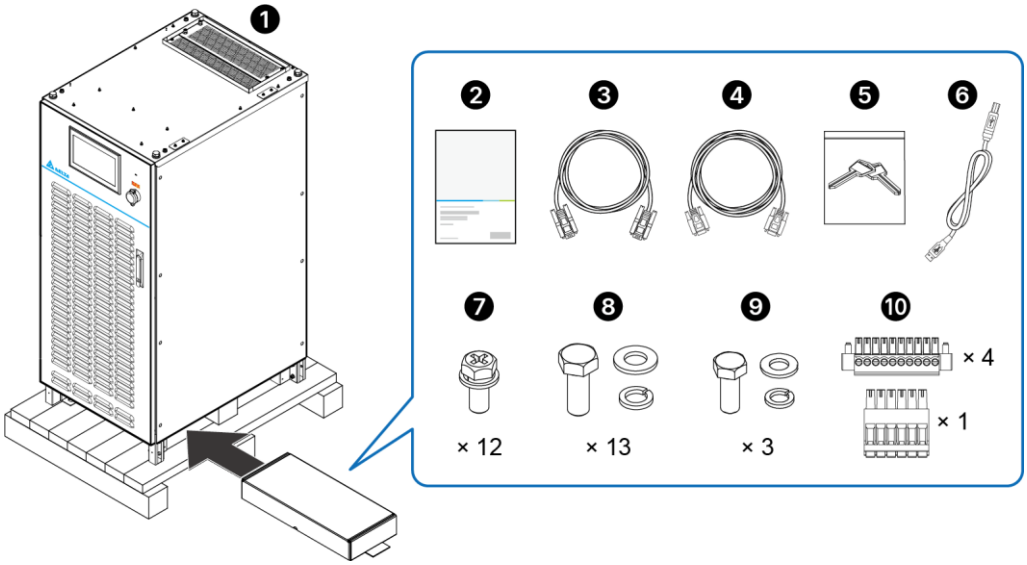

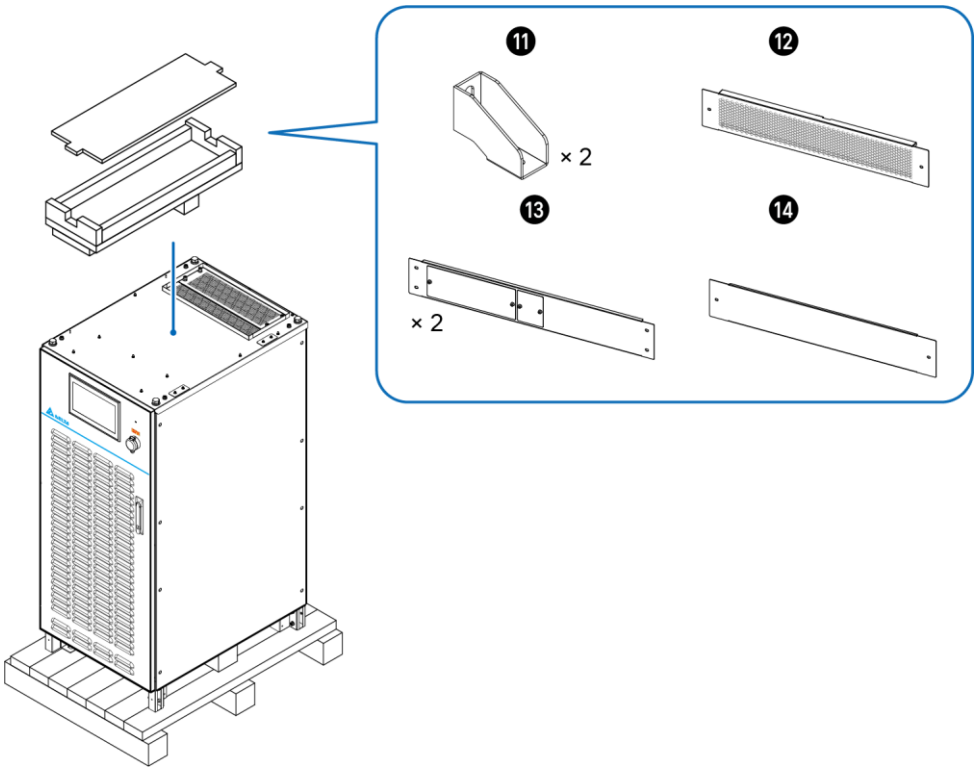

No.	Item	Q'ty
❶	UPS	1 PC
❷	User Manual	1 PC
❸	RS-232 Cable	1 PC
❹	Parallel Cable (length: 5 m (196.85"))	1 PC
❺	Key	2 PCS
❻	USB Cable	1 PC
❼	M5 Screw (used for rodent shields)	12 PCS
❽	M10 Screw, Flat Washer and Spring Washer (used for input, output, bypass, neutral and battery wiring)	13 PCS
❾	M8 Screw, Flat Washer and Spring Washer (used for grounding wiring)	3 PCS
❿	Terminal Block (10-pin)	4 PCS
	Terminal Block (6-pin)	1 PC
⓫	Wall Bracket	2 PCS
⓬	Rodent Shield_ Front	1 PC
⓭	Rodent Shield_ Lateral	2 PCS
⓮	Rodent Shield_ Rear	1 PC

100/ 120kVA UPS

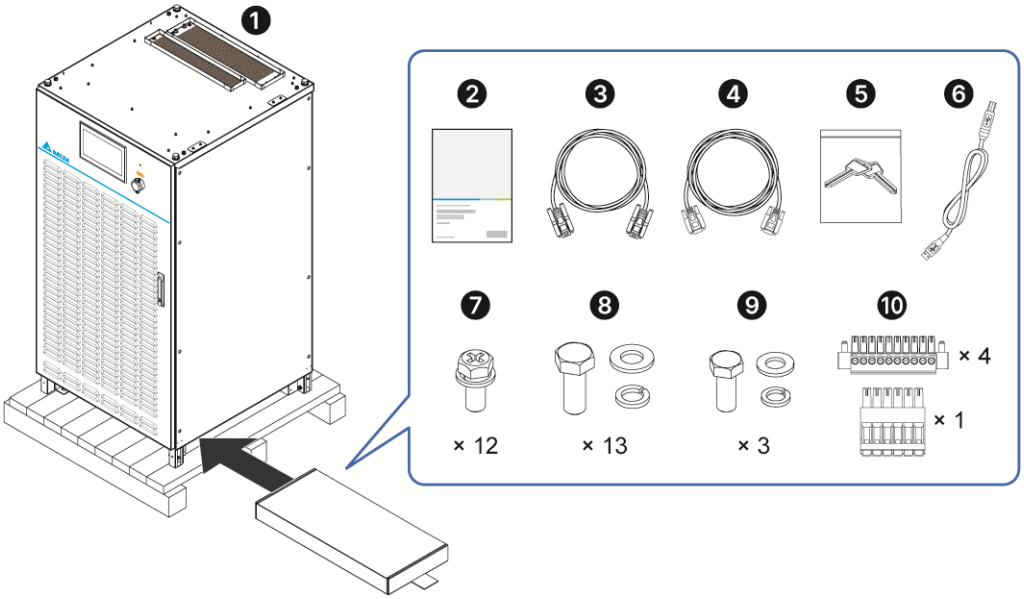

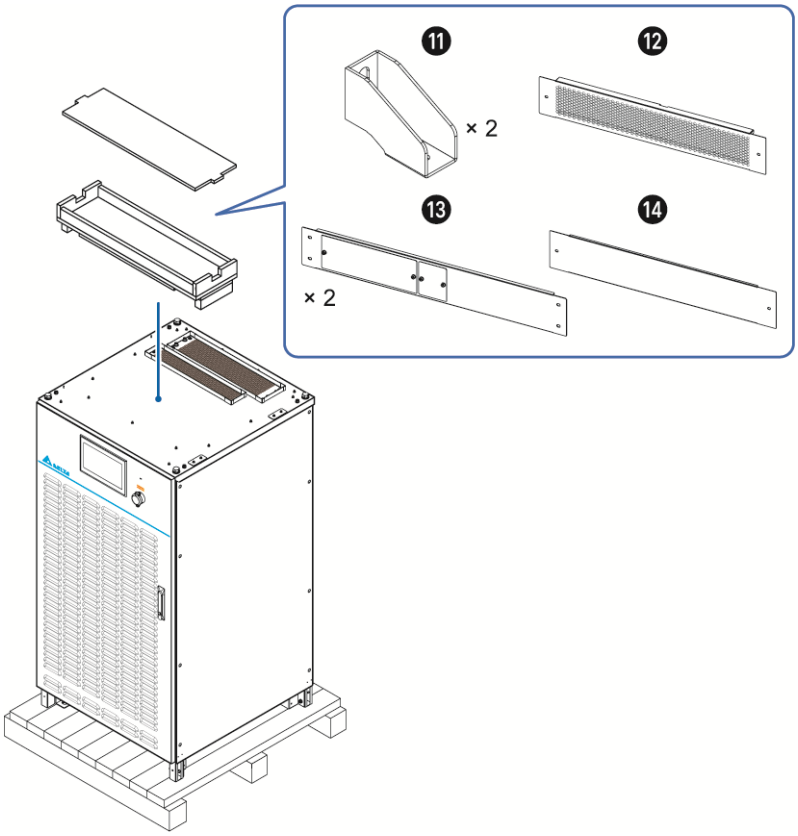

No.	Item	Q'ty
❶	UPS	1 PC
❷	User Manual	1 PC
❸	RS-232 Cable	1 PC
❹	Parallel Cable (length: 5 m (196.85"))	1 PC
❺	Key	2 PCS
❻	USB Cable	1 PC
❼	M5 Screw (used for rodent shields)	12 PCS
❽	M10 Screw, Flat Washer and Spring Washer (used for input, output, bypass, neutral and battery wiring)	13 PCS
❾	M8 Screw, Flat Washer and Spring Washer (used for grounding wiring)	3 PCS
❿	Terminal Block (10-pin)	4 PCS
	Terminal Block (6-pin)	1 PC
⓫	Wall Bracket	2 PCS
⓬	Rodent Shield_ Front	1 PC
⓭	Rodent Shield_ Lateral	2 PCS
⓮	Rodent Shield_ Rear	1 PC

160/ 200kVA UPS

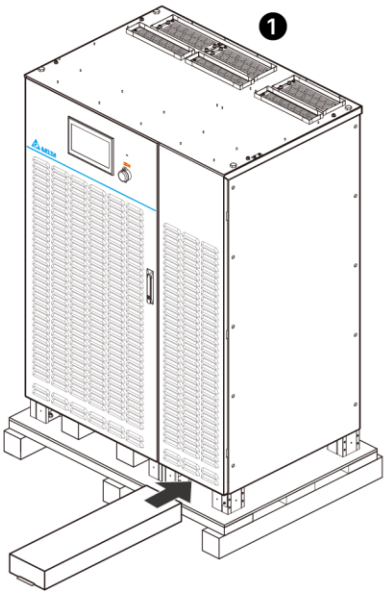

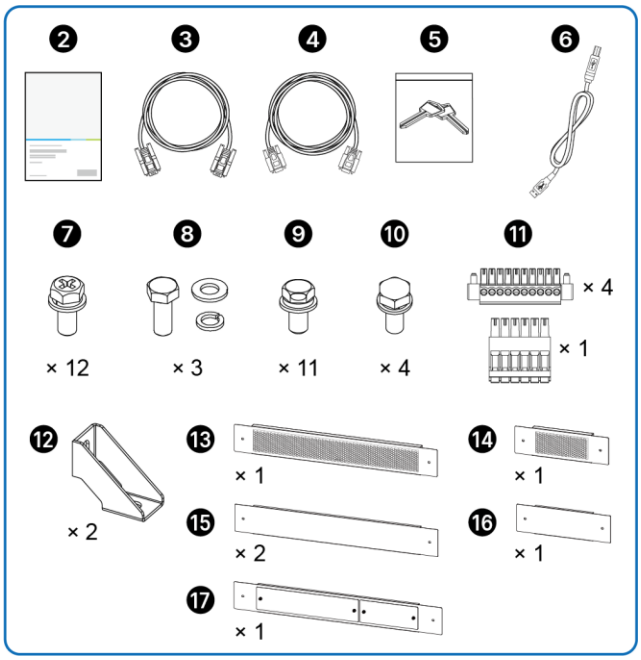

No.	Item	Q'ty
1	UPS	1 PC
2	User Manual	1 PC
3	RS-232 Cable	1 PC
4	Parallel Cable (length: 5 m (196.85"))	1 PC
5	Key	2 PCS
6	USB Cable	1 PC
7	M5 Screw (used for rodent shields)	12 PCS
8	M8 Screw, Flat Washer and Spring Washer (used for grounding wiring)	3 PCS
9	M12 Screw (used for input, output, bypass and neutral wiring)	11 PCS

No.	Item	Q'ty
❿	M10 Screw (used for battery wiring)	4 PCS
⓫	Terminal Block (10-pin)	4 PCS
	Terminal Block (6-pin)	1 PC
⓬	Wall Bracket	2 PCS
⓭	Rodent Shield_ Front Left	1 PC
⓮	Rodent Shield_ Front Right	1 PC
⓯	Rodent Shield_ Lateral	2 PCS
⓰	Rodent Shield_ Rear Left	1 PC
⓱	Rodent Shield_ Rear Right	1 PC

2.4 Functions & Features

- True on-line double-conversion UPS adopts DSP chip and IGBT technology to protect your sensitive electronic equipment from power interruption.
- Wide AC input voltage range (324 Vac ~ 477 Vac) reduces frequent transfer from On-Line mode to Battery mode to save battery consumption and prolong battery life.
- Automatic input frequency detection enables operation at 50 Hz or 60 Hz.
- AC start-up function even when the UPS is not connected to the batteries.

WARNING:

Please note that when the UPS is not connected to the batteries, it will not protect your equipment if the utility power is lost.

- Dual-input design features an independent rectifier and a bypass static switch.
- Automatic restart:
  1. After a low battery shutdown, the UPS's inverter will restart in On-Line mode automatically right after the AC input resumes.
  2. The UPS returns automatically to On-Line mode from Bypass mode after an overload condition is cleared.

- Surge protection and EMI filter functions.
- Both auxiliary power and control circuit adopt redundancy design, which doubly enhances UPS reliability.
- Provision of setting options such as battery test (schedulable) and battery replacement alarm.
- Smart battery charger design allows auto-charging or manual charging to shorten the charging time.
- Generator compatible.
- State-of-the-art microprocessor technology performs self-detection and monitors fan speed in real time, which provides complete and detailed operating status of the UPS.
- Built-in memory stores a maximum of 10,000 event logs.
- Fan speed auto adjustment prolongs fan life and reduces noise when the critical loads decrease. Moreover, fan failure detection circuit is established.

2.5 Exterior & Dimensions

20/ 30/ 40/ 50kVA UPS

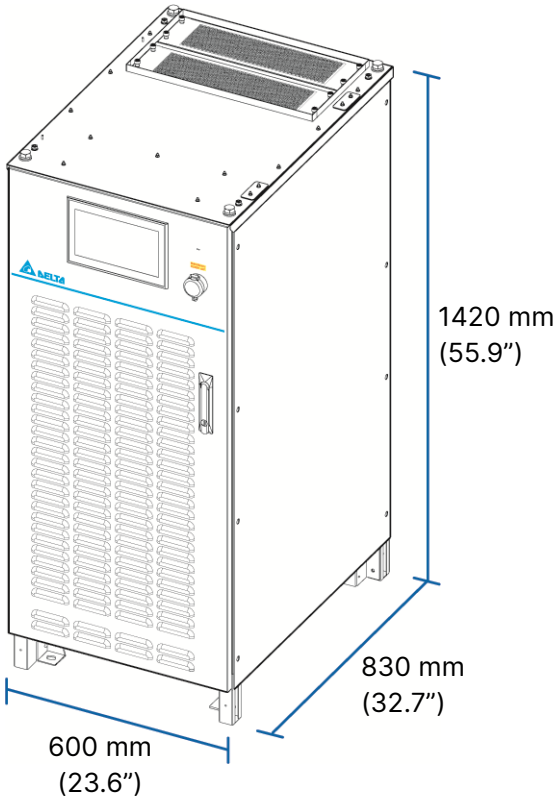

60/ 80kVA UPS

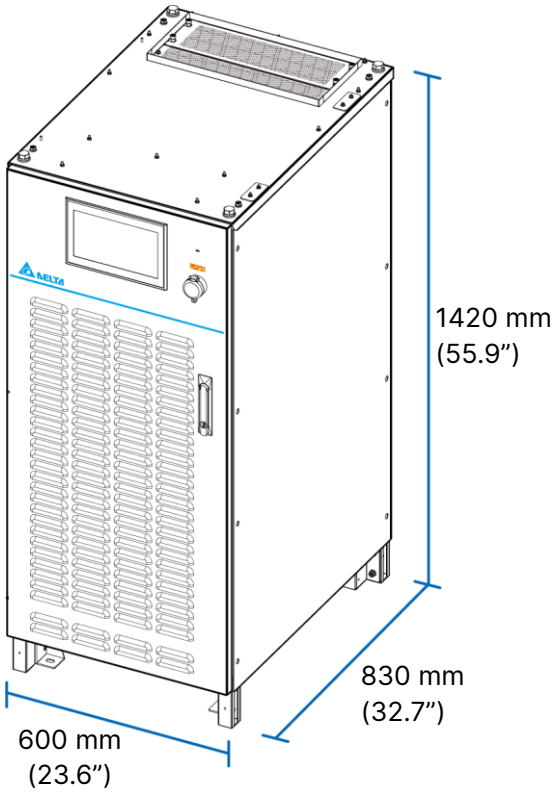

100/ 120kVA UPS

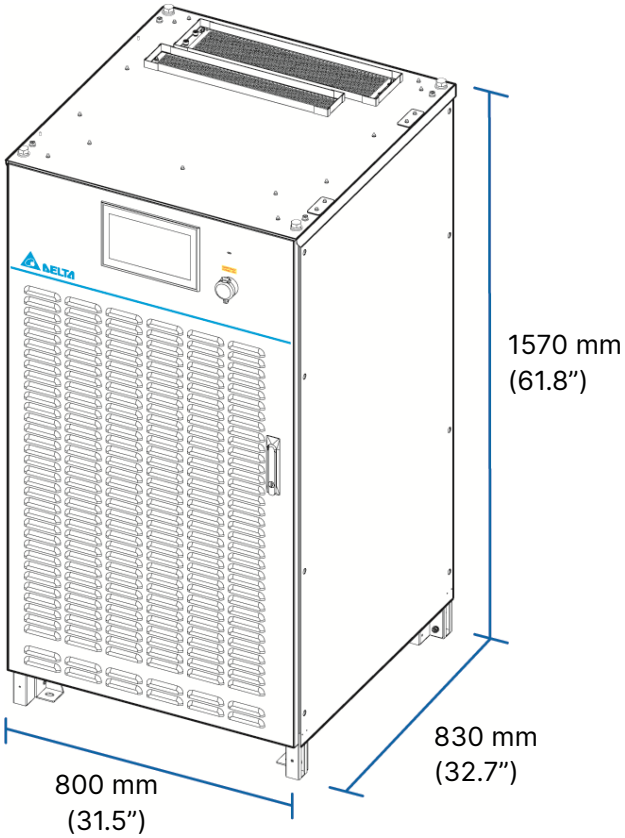

160/ 200kVA UPS

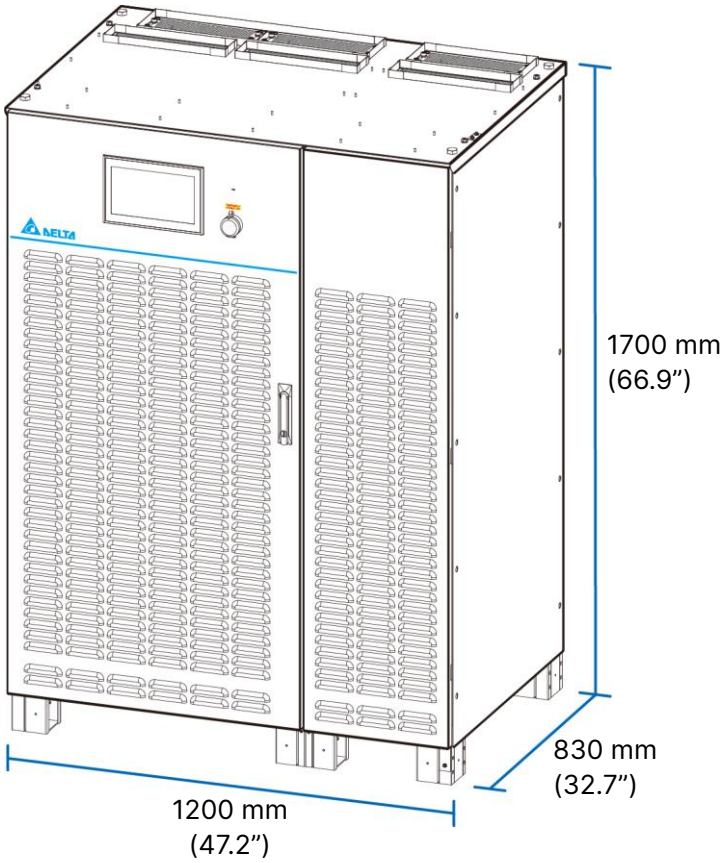

Figure 2-1: Exterior & Dimensions

2.6 Front View

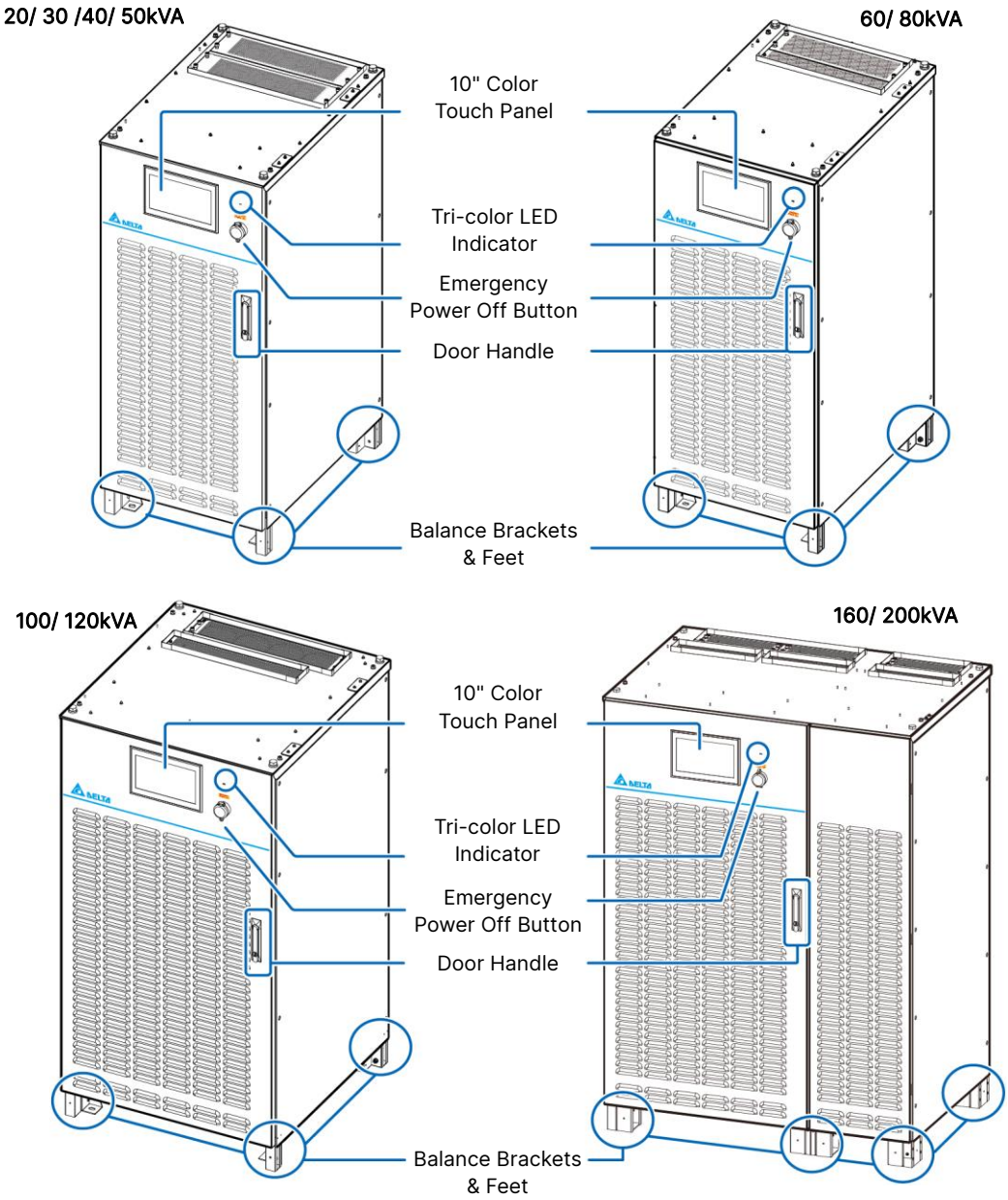

Figure 2-2: Front View

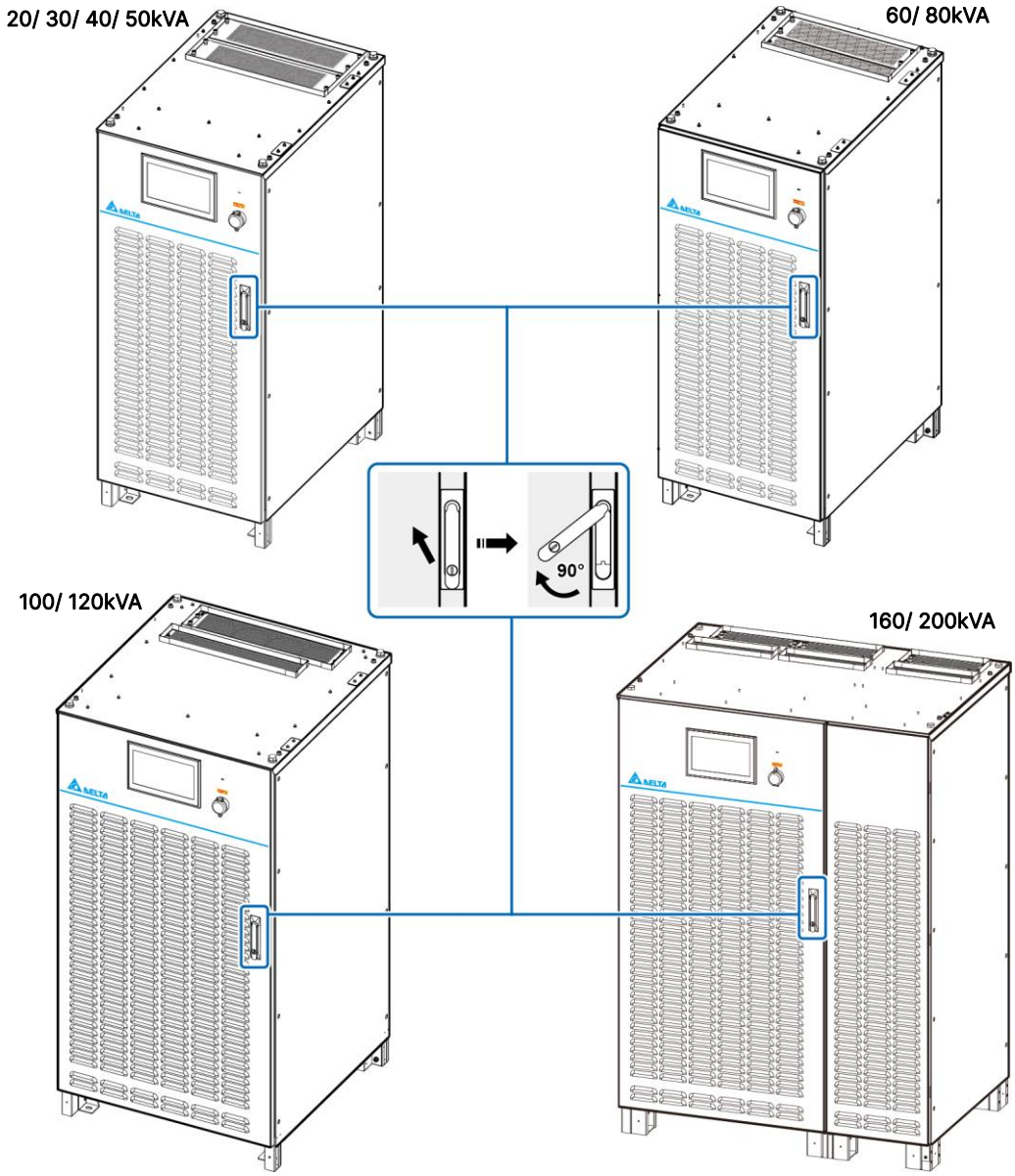

Figure 2-3: How to Open the Front Door

2.7 Internal View

WARNING:

Only authorized Delta engineers or service personnel can perform installation, wiring, panel & cover removal, maintenance and operation. If you want to execute any action mentioned above by yourself, the action must be under the supervision of authorized Delta engineers or service personnel.

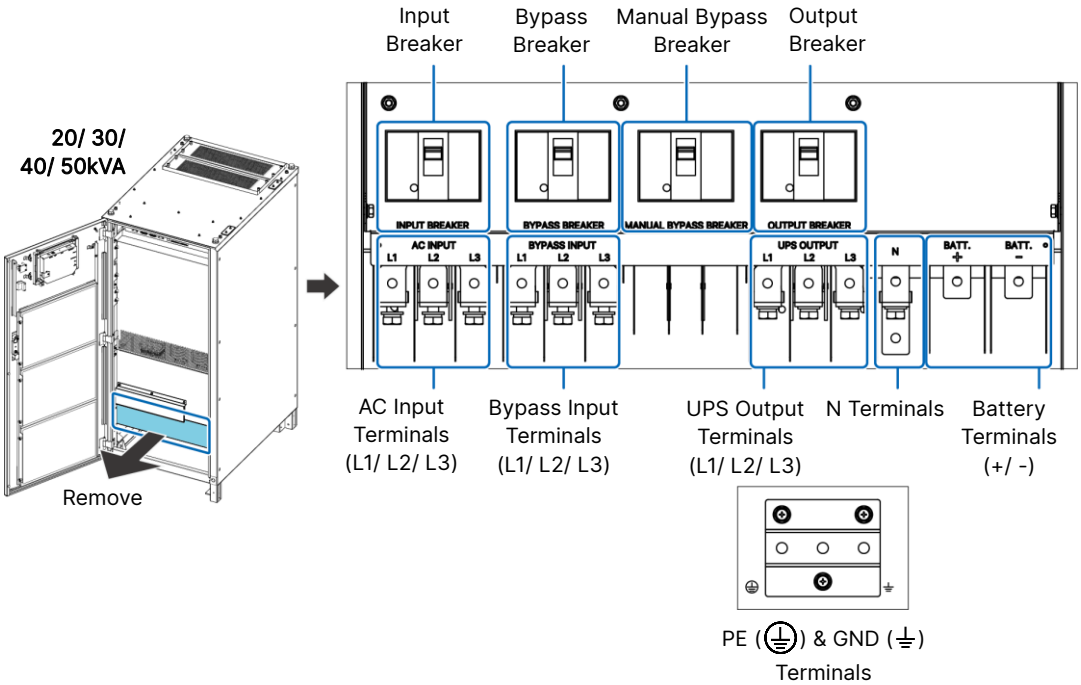

Figure 2-4: 20/ 30/ 40/ 50kVA UPS_ Wiring Terminals & Breakers

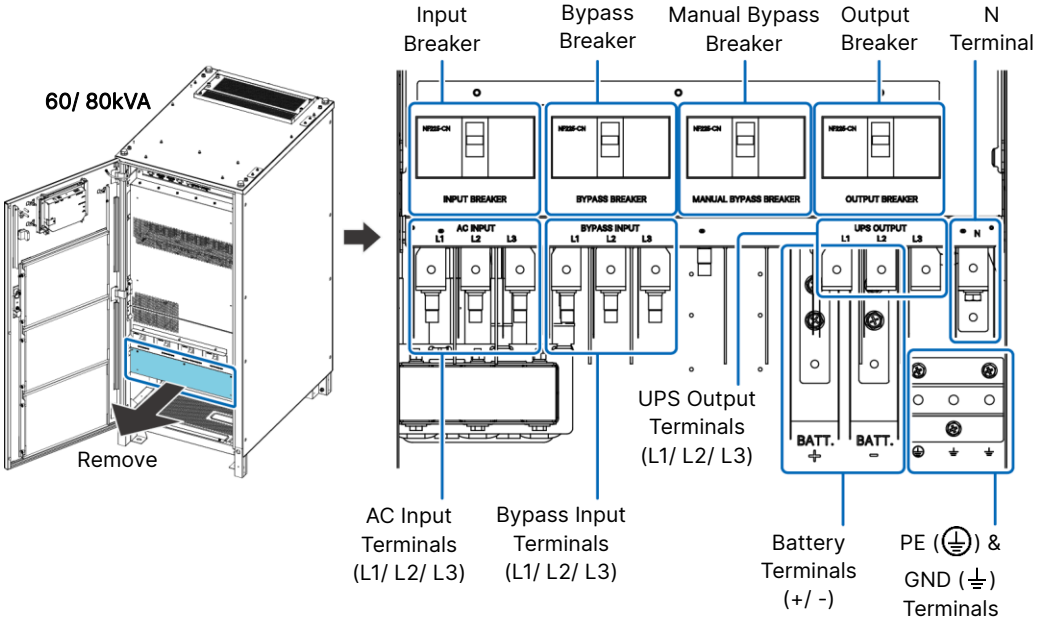

Figure 2-5: 60/ 80kVA UPS_ Wiring Terminals & Breakers

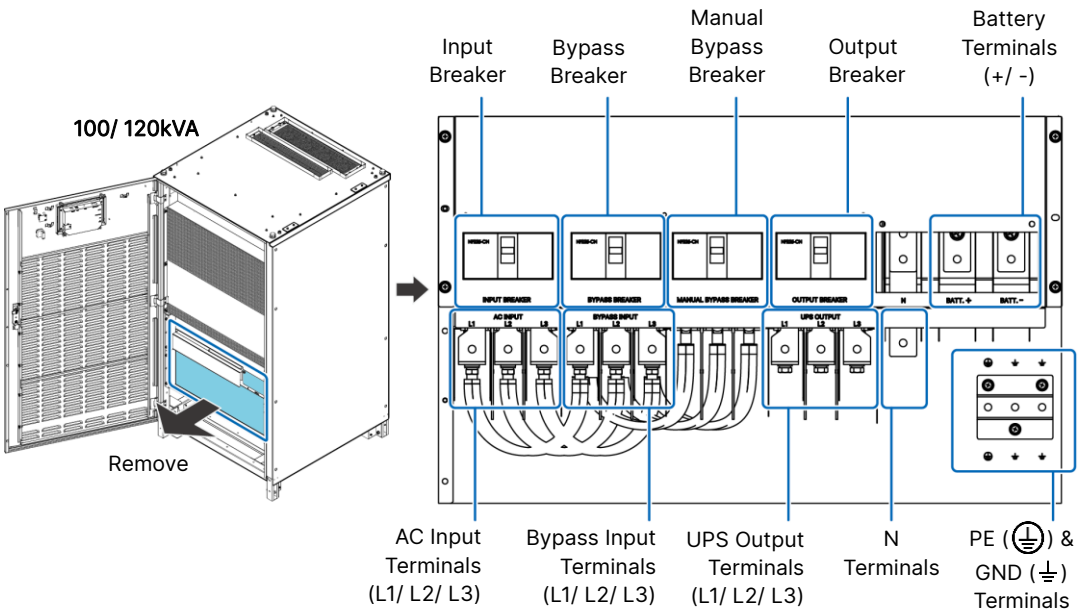

Figure 2-6: 100/ 120kVA UPS_ Wiring Terminals & Breakers

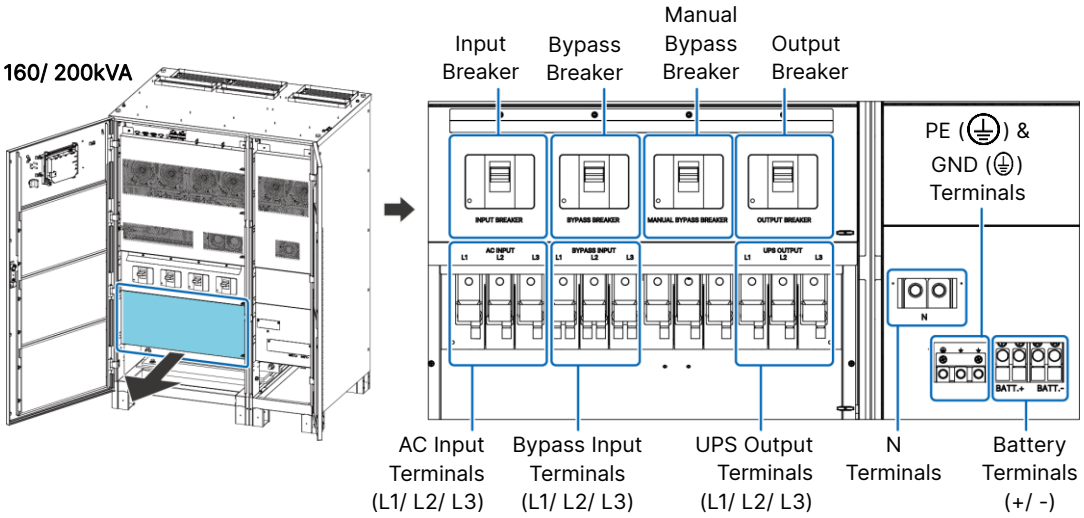

Figure 2-7: 160/ 200kVA UPS_ Wiring Terminals & Breakers

2.8 Tri-color LED Indicator & Buzzer

Figure 2-8: Tri-color LED Indicator Location

NOTE:

For information about the 10" color touch panel, please refer to *7. LCD Display & Settings*.

The buzzer is located at the rear of the UPS's front door. Please refer to the figure below.

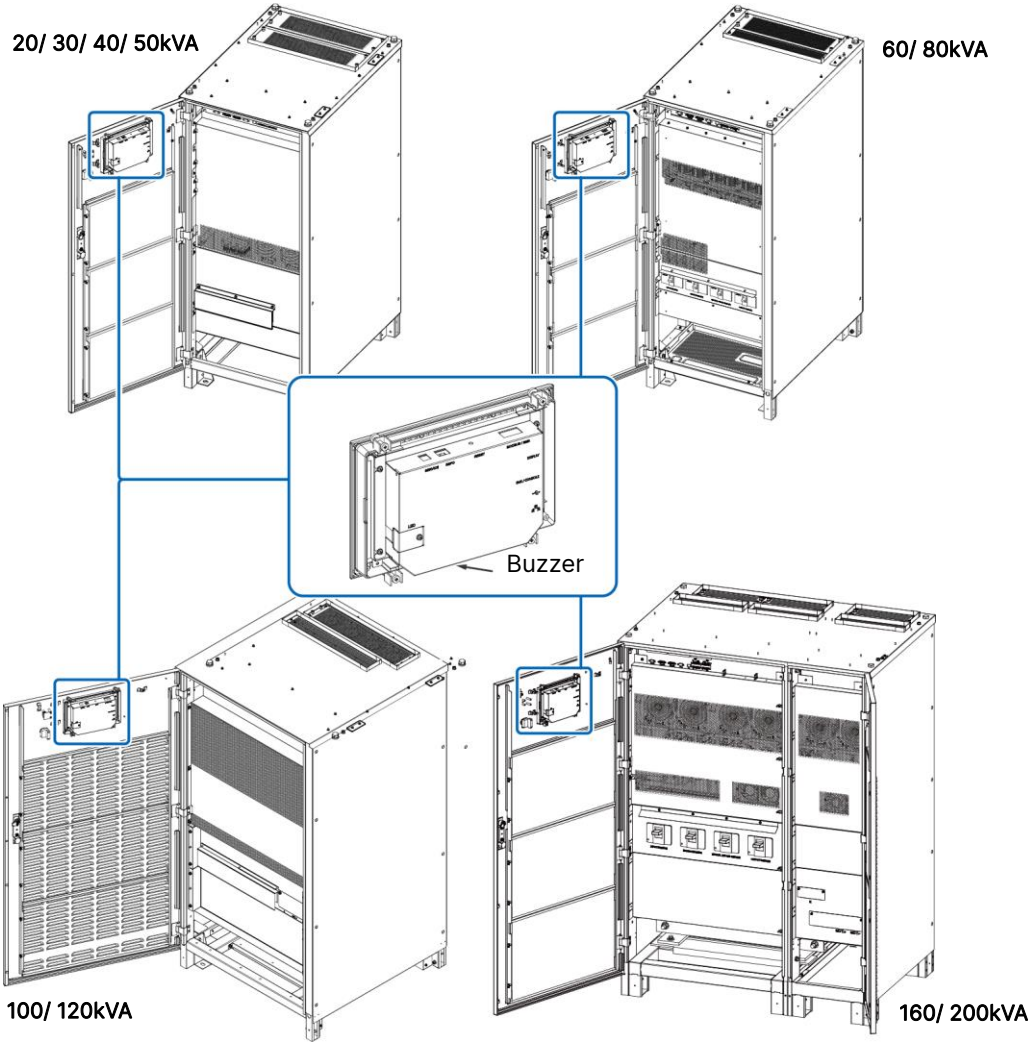

Figure 2-9: Buzzer Location

Table 2-1: Tri-color LED Indicator, UPS Operation Mode & Buzzer

<table>
<tr><th>Tri-color LED Indicator</th><th>Status</th><th>Meaning</th></tr>
<tr><td>Green</td><td>ON</td><td>• It indicates that the UPS is operating in one of the following modes.
<table>
<tr><th>UPS Operation Mode</th><th>Text on the LCD Screen (upper-right corner)</th></tr>
<tr><td>On-Line Mode</td><td>‘On-Line’</td></tr>
<tr><td>ECO Mode</td><td>‘ECO’</td></tr>
<tr><td>Frequency Conversion Mode</td><td>‘Frequency Conversion’</td></tr>
</table></td></tr>
<tr><td>Yellow</td><td>ON</td><td>• It indicates that the UPS is operating in one of the following modes.
<table>
<tr><th>UPS Operation Mode</th><th>Text on the LCD Screen (upper-right corner)</th></tr>
<tr><td>Bypass Mode</td><td>‘Bypass’</td></tr>
<tr><td>Battery Mode</td><td>‘Battery’</td></tr>
<tr><td>Standby Mode</td><td>‘Standby’</td></tr>
<tr><td>Softstart Mode</td><td>‘Softstart’</td></tr>
</table>
• It indicates a minor or medium warning message.
<table>
<tr><th>Warning Level</th><th>Buzzer Frequency</th></tr>
<tr><td>Minor</td><td>It sounds 0.5 seconds every 3 seconds.</td></tr>
<tr><td>Medium</td><td>It sounds 0.5 seconds every second.</td></tr>
</table></td></tr>
<tr><td>Red</td><td>ON</td><td>• It indicates a major warning message.
<table>
<tr><th>Warning Level</th><th>Buzzer Frequency</th></tr>
<tr><td>Major</td><td>Long beep.</td></tr>
</table></td></tr>
</table>

Chapter 3 : Operation Modes

The UPS runs in six basic operation modes, which are **On-Line** mode, **Battery** mode, **Bypass** mode, **Manual Bypass** mode, **ECO** mode and **Frequency Conversion** mode.

NOTE:

1. In this user manual, the meaning of Q1, Q2, Q3, Q4 and Q5 is shown as follows.

Code	Meaning
Q1	Input Breaker
Q2	Bypass Breaker
Q3	Manual Bypass Breaker
Q4	Output Breaker
Q5	External Battery Cabinet's Breaker

2. To enable the following operation modes, please refer to *6. Operation* & *7. LCD Display & Settings*.

3.1 On-Line Mode

In On-Line mode, the main AC source supplies AC power via the Input Breaker (Q1) to the rectifier, and the rectifier converts the AC power to DC power and supplies the DC power to the inverter. In the meantime, the rectifier provides charging power to the batteries. After receiving the DC power, the inverter converts it into clean and stable AC power to the connected critical loads via the Output Breaker (Q4). During On-Line mode, the UPS's tri-color LED illuminates green and the text '**On-Line**' appears in the upper right corner of the LCD screen.

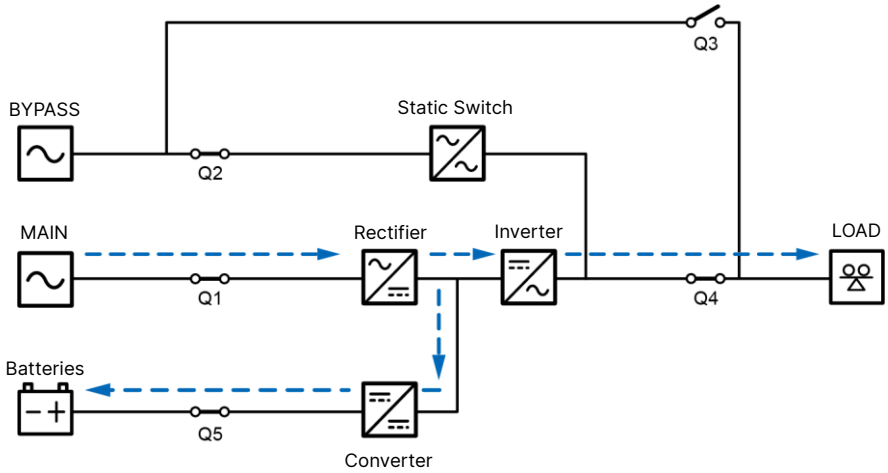

Figure 3-1: On-Line Mode Diagram

3.2 Battery Mode

The UPS transfers to Battery mode automatically if the main AC source is abnormal, for example, when unstable voltage or a power outage occurs. In Battery mode, the batteries provide DC power and the UPS converts it into AC power and supplies it to the connected critical loads via the Output Breaker (Q4). During the conversion process, output voltage remains the same. During Battery mode, the UPS's tri-color LED illuminates yellow and the text '**Battery**' appears in the upper right corner of the LCD screen.

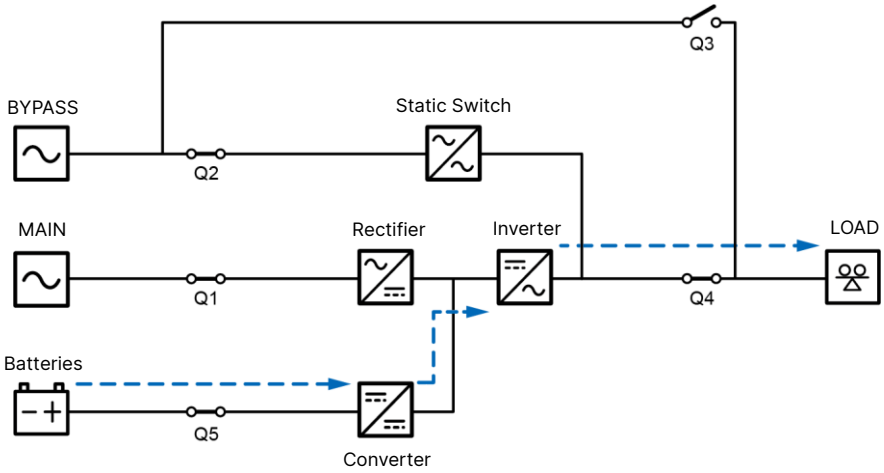

Figure 3-2: Battery Mode Diagram

3.3 Bypass Mode

When the inverter encounters abnormal situations such as over temperature, overload, short circuit, abnormal output voltage or low battery, it will automatically shut itself down. If the UPS detects the bypass input is normal, it will automatically switch to Bypass mode to protect the connected critical loads from power interruption. After the above-mentioned abnormalities are eliminated, the UPS will switch back to On-Line mode from Bypass mode. During Bypass mode, the UPS's tri-color LED illuminates yellow and the text '**Bypass**' appears in the upper right corner of the LCD screen.

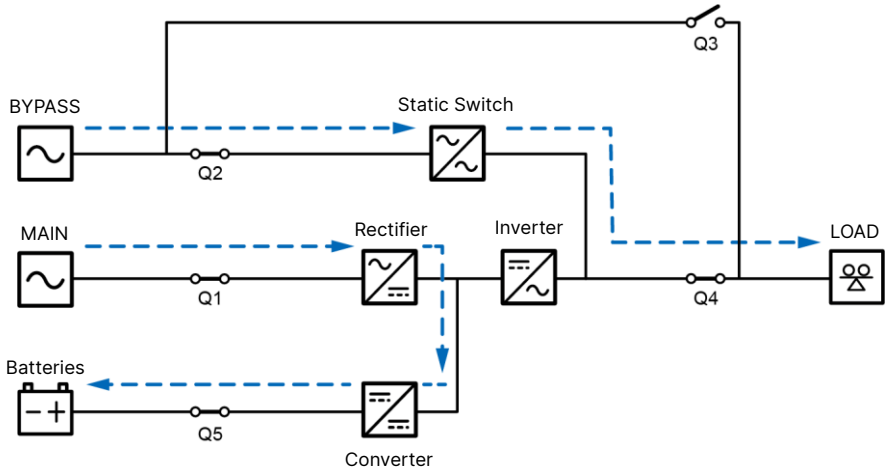

Figure 3-3: Bypass Mode Diagram

3.4 Manual Bypass Mode

When the UPS runs in Manual Bypass mode, the current only flows through the maintenance bypass so that the maintenance personnel can maintain the circuit inside the UPS. However, DO NOT touch any terminal and bus bar which may carry high-voltage electricity. During Manual Bypass mode, the UPS's input power is completely cut off, and the critical loads are not protected. At the moment, the UPS's tri-color LED and LCD screen are both off.

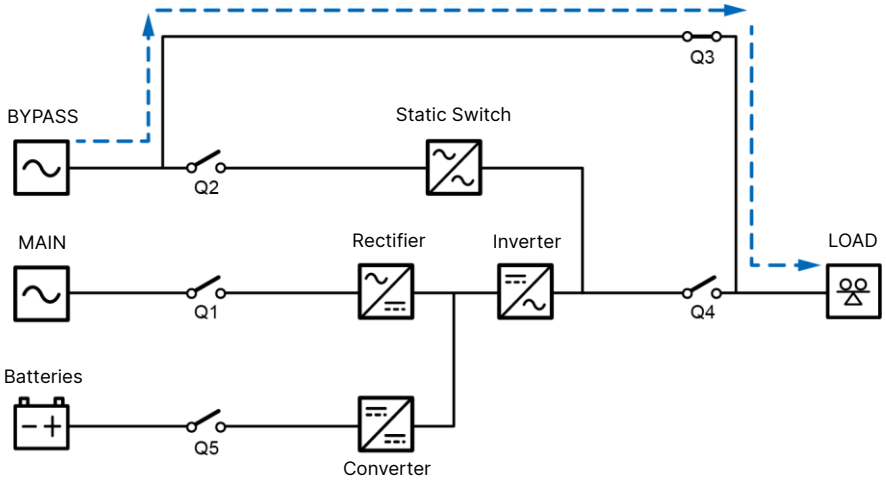

Figure 3-4: Manual Bypass Mode Diagram

3.5 ECO Mode

After the UPS is manually set to ECO mode via the LCD, the UPS will work in Bypass mode if bypass input voltage and frequency are within ± 10% of the rated voltage and ± 3 Hz of the rated frequency respectively. Otherwise, the UPS will run in On-Line mode. During ECO mode, the UPS's tri-color LED illuminates green and the text '**ECO**' appears in the upper right corner of the LCD screen.

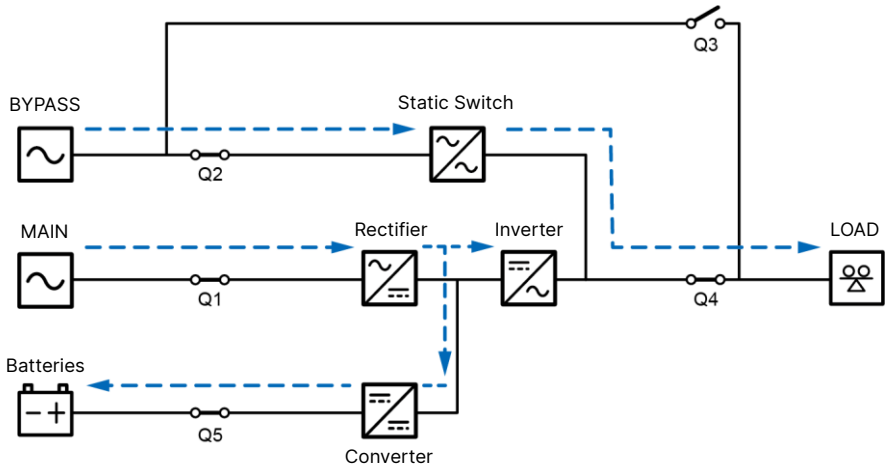

Figure 3-5: ECO Mode Diagram

3.6 Frequency Conversion Mode

NOTE:

Frequency Conversion mode is only applicable to a single UPS and not to parallel UPSs

After the UPS is manually set to Frequency Conversion mode via the LCD, the inverter will automatically select 50 Hz or 60 Hz as the fixed output frequency. After the output frequency is determined, the system will automatically disable the bypass function. Please note that, once the inverter shuts down, there is no bypass output. During Frequency Conversion mode, the UPS's tri-color LED illuminates green and the text '**Frequency Conversion**' appears in the upper right corner of the screen.

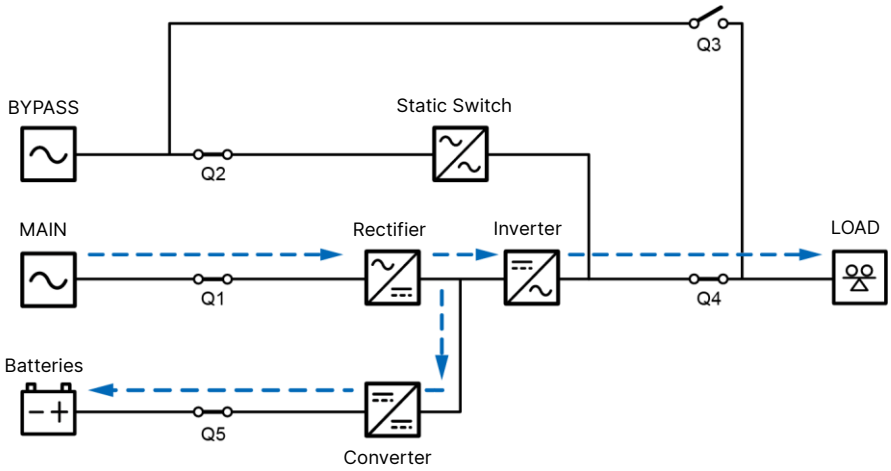

Figure 3-6: Frequency Conversion Mode

Chapter 4 : Communication Interfaces

The communication interfaces are located at two different places. One is on the front of the UPS with its front door open and the other is at the rear of the touch panel.

NOTE:

1. It is suggested that the wire size of the cable connected to any dry contact should be 0.519 mm^2 (20 AWG) or 0.325 mm^2 (22 AWG).
2. For signal communication, twisted wires should be used, isolated from the power and labelled for inspection and maintenance.

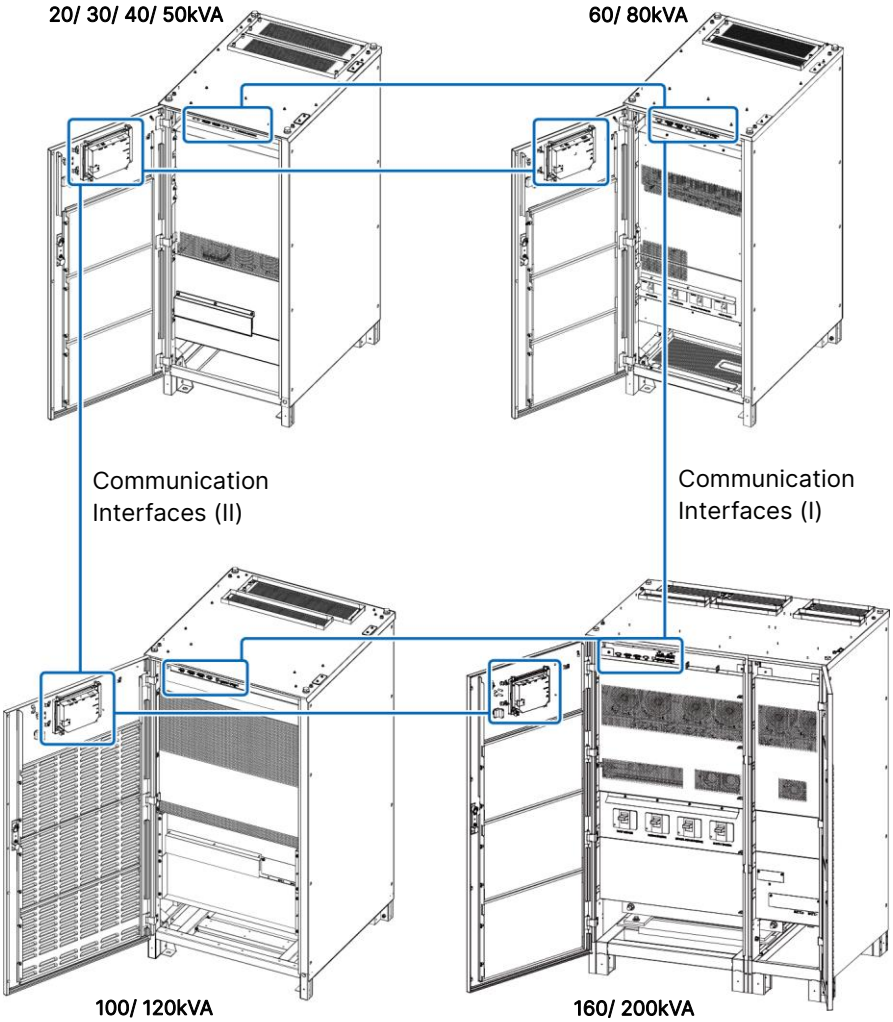

Figure 4-1: Location of the Communication Interfaces

4.1 Communication Interfaces (I): on the Front of the UPS with Its Front Door Open

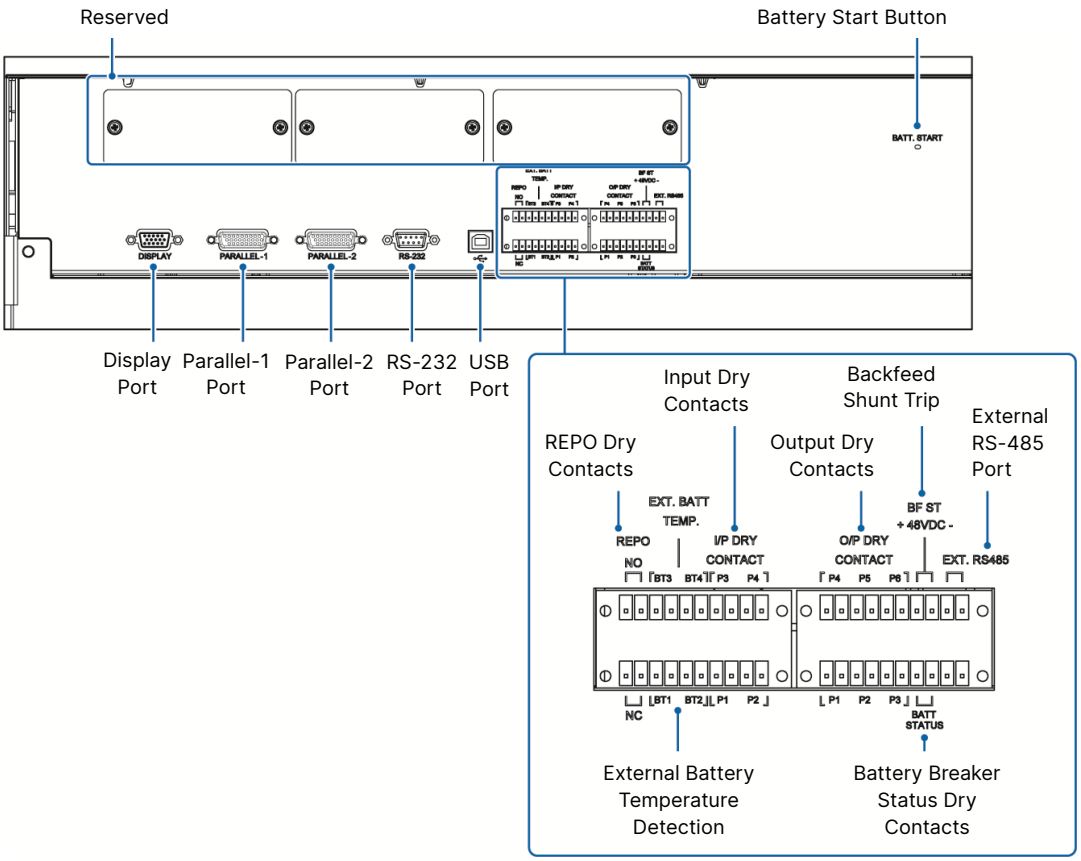

Figure 4-2: Communication Interfaces (I)

4.1.1 Display Port

Before shipment, the display port has been connected to the 10” touch panel with the designated cable in Delta factory.

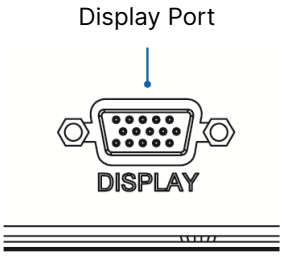

Figure 4-3: Display Port

4.1.2 Parallel Ports

The parallel ports are used to connect to parallel UPSs to increase system capacity and redundancy.

Up to eight UPS units with the same capacity, voltage, frequency and version can be paralleled. Please daisy-chain the parallel UPSs with the provided parallel cables only.

Please refer to *5.5.4 Parallel Units Wiring* to route the parallel cables.

WARNING:

One parallel cable is provided in each UPS's accessory package. Using non-Delta parallel cables to parallel the UPSs may cause failure, malfunctions and accidents.

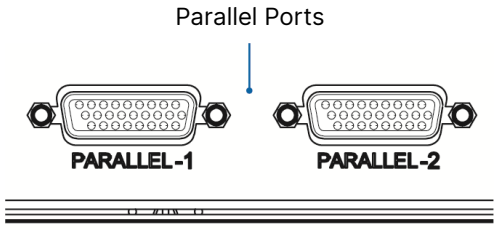

Figure 4-4: Parallel Ports

4.1.3 RS-232 Port & USB Port

The RS-232 port & USB port are available for authorized service personnel.

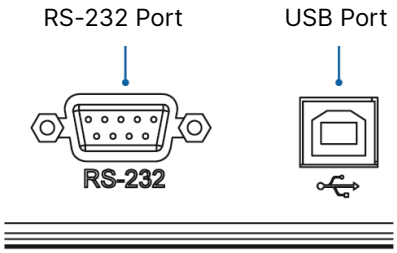

Figure 4-5: RS-232 Port & USB Port

4.1.4 REPO Dry Contacts

Connect the REPO dry contacts to a user-supplied switch so you can remotely shut down the UPS when an emergency occurs. Both of the normally open (NO) and normally closed (NC) dry contacts shown below must be connected.

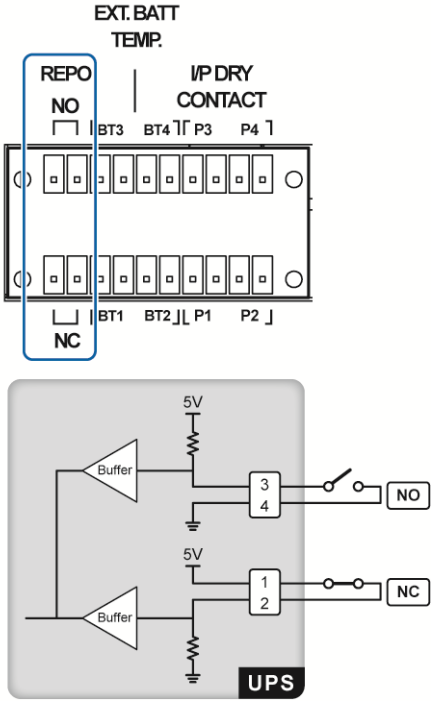

Figure 4-6: REPO Dry Contacts

4.1.5 External Battery Temperature Detection

You can use the external battery temperature detection (BT1, BT2, BT3 and BT4) to detect a maximum of four external battery cabinets' temperature. You need to purchase the battery cabinet temperature sensor cable (optional).

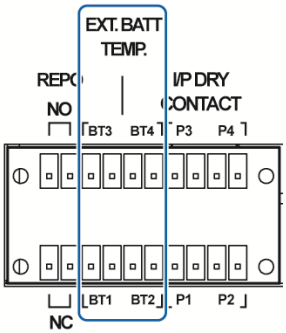

Figure 4-7: External Battery Temperature Detection

4.1.6 Input Dry Contacts

There are four sets of programmable input dry contacts (P1 ~P4). The input dry contacts allow the UPS to receive external signals from peripheral devices and let the UPS response accordingly. Please use the touch panel to set each dry contact as normally open (NO) or normally closed (NC). Each input dry contact can be assigned a specific event. Four out of fourteen events can be assigned according to your applications. Please refer to the table below and *7.6.6 Dry Contact Setting*.

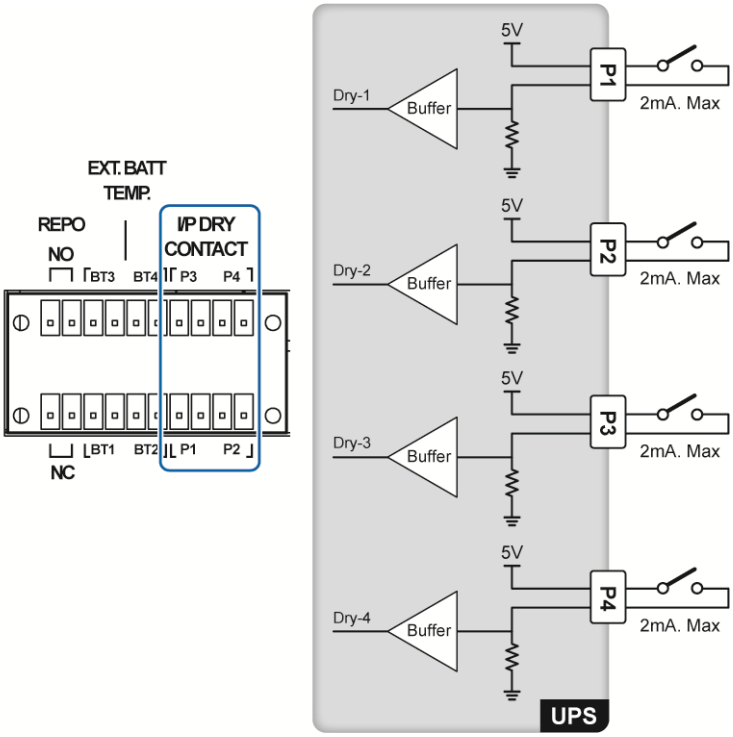

Figure 4-8: Input Dry Contacts & Schematic

No.	Event	Description
1	None	No set-up.
2	Generator Status	Generator status detection.
3	Battery Ground Fail	Battery leakage detection.
4	External Battery Breaker Detection	Status detection of the external battery cabinet's breaker.
5	Charger Off*1	Turn off the charger.
6	Active Standby	In Bypass mode: the UPS will remain to run in Bypass mode. In On-Line mode: the UPS will transfer to Bypass mode immediately. In ECO mode: the UPS will transfer to Bypass mode immediately. In Battery mode: the UPS will transfer to Standby mode immediately.
7	Battery Abnormal Shutdown	In On-Line mode: the UPS will issue a battery abnormal warning. In Battery mode: the UPS will transfer to Bypass or Standby mode immediately.
8	Input Transformer OTW	Input transformer over temperature warning.
9	Output Transformer OTW	Output transformer over temperature warning.
10	Battery Fuse Open	The battery fuse is blown.
11	Input Current Limit Stage Setting	Limit the input current to a specific Ampere (adjustable in a certain range). Please refer to *7.6.3 Input & Output Setting*.
12	Major Battery Abnormal Alarm	Alarm due to detection of major fault from the battery management system.
13	Minor Battery Abnormal Alarm	Alarm due to detection of minor fault from the battery management system.
14	Force Sync External Source	It synchronizes the output frequency and phase of an external voltage source (ex. generator, UPS, grid, etc.).

NOTE:

*1 If you use non-Delta lithium-ion batteries, you must use the LCD to set up **Charger Off**; please refer to *7.6.6 Dry Contact Setting*. For settings relevant to the non-Delta lithium-ion batteries, please refer to *7.6.4 Battery & Charging Setting*. For more information, please contact Delta customer service.

4.1.7 Output Dry Contacts

There are six sets of programmable output dry contacts (P1 ~ P6). Please use the touch panel to set each dry contact as normally open (NO) or normally closed (NC). Each dry contact can be assigned a specific event. Six out of twenty-two events can be assigned according to your applications. Please refer to the table below and *7.6.6 Dry Contact Setting*.

NOTE:

Since the output dry contacts belong to the secondary circuit, the voltage of each dry contact's connected device should not exceed 60 Vdc/ 42 Vac to avoid electric shock or insufficient insulation.

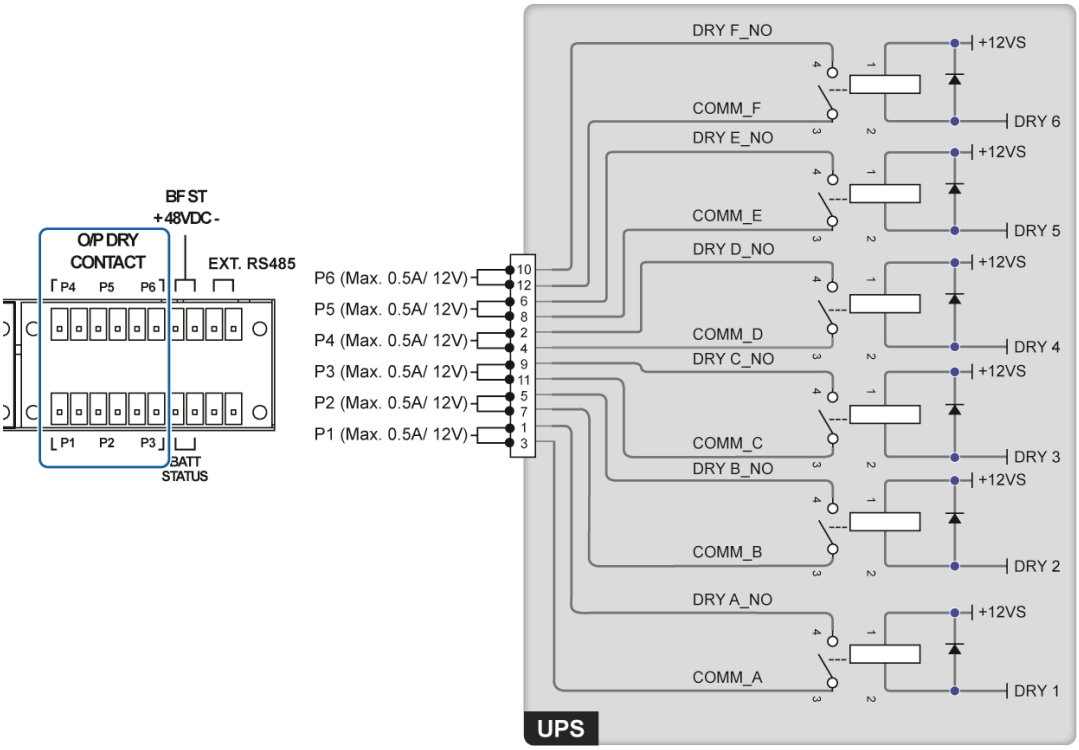

Figure 4-9: Output Dry Contacts & Schematic

No.	Event	Description
1	None	No set-up.
2	Load On Inverter	The UPS works in On-Line mode.
3	Load On Bypass	The UPS output is supplied by the bypass source.
4	Load On Battery	When the main AC source fails, the batteries supply power to the critical loads.
5	Battery Low	When the UPS runs in Battery mode, the battery voltage is lower than the setup limit (default: 440 Vdc with using 40 PCS VRLA batteries).
6	Bypass Input Abnormal	The bypass voltage, frequency or phase sequence is abnormal.
7	Battery Test Fail	During the battery test, the battery voltage is out of the setup limit.
8	Internal Comm. Fail	The #n power module's internal communication is abnormal.
9	External Parallel Comm. Fail (for parallel application only)	In parallel mode, parallel communication is abnormal.
10	Output Overload	The UPS is overloaded or the UPS shuts down to let the bypass supply power to the critical loads.
11	EPO Activated	The EPO button is pressed to urgently power off the UPS.
12	Load On Manual Bypass	The Manual Bypass Breaker (Q3) is turned on and the UPS transfers to Manual Bypass mode.
13	Battery Over Temperature	The external battery cabinet's temperature is too high.
14	Output Voltage Abnormal	The output voltage is abnormal.
15	Battery Need Replacement	The battery replacement date is due.
16	Bypass Over Temperature	The bypass static switch temperature is too high.

No.	Event	Description
17	Bypass Static Switch Fault	The bypass static switch has an open/ short issue.
18	UPS Over Temperature	The UPS temperature is too high.
19	Battery Breaker Shunt Trip Via EPO	When the EPO button is pressed, the UPS will send a signal to the connected external shunt trip device to cut off the battery power.
20	Backfeed Protection	When the UPS's bypass SCR has a short-circuit issue, the UPS will send a signal to the connected external shunt trip device to cut off the backfeed voltage.
21	General Alarm	When any UPS alarm occurs, the UPS will send a signal.
22	Load On ECO	The UPS works in ECO mode.

4.1.8 Backfeed Shunt Trip Function

When the UPS's bypass SCR has a short-circuit issue, the UPS will provide 48 Vdc isolated power to the connected external backfeed contactor to cut off the backfeed voltage.

NOTE:

When the system diagnoses backfeed shunt trip, please cut off the power supply and use a multi-meter to confirm that there is no power at the input end before performing maintenance.

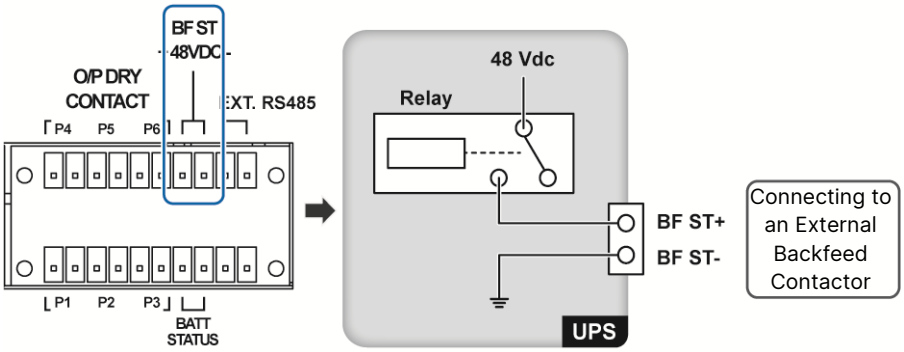

Figure 4-10: Backfeed Shunt Trip & Schematic

4.1.9 Battery Breaker Status Dry Contacts

The battery breaker status dry contacts are used to detect the status of the external battery cabinet's breaker (Q5). For detection, please connect user-supplied auxiliary switches to the dry contacts (see the figure below). If you don't execute the above-mentioned setup, the default setting of the external battery cabinet's breaker (Q5) shown on the LCD will be ON.

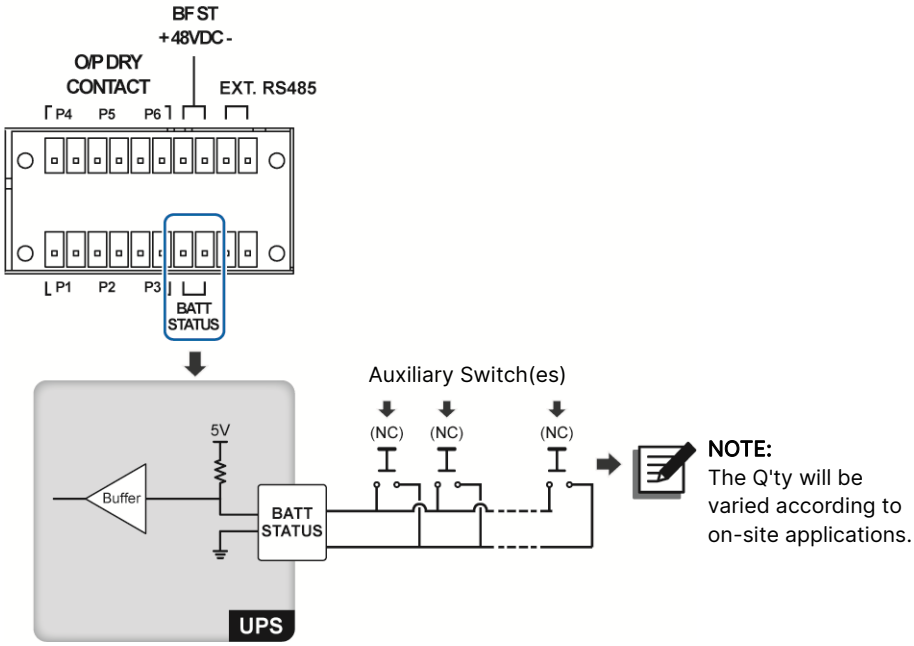

Figure 4-11: Battery Breaker Status Dry Contacts & Schematic

4.1.10 External RS-485 Port

The external RS-485 port is reserved.

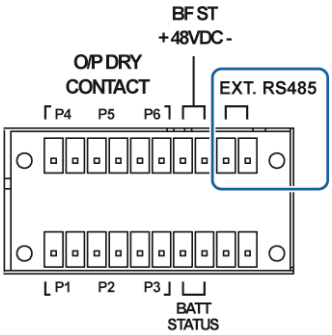

Figure 4-12: External RS-485 Port

4.1.11 Battery Start Button

To activate battery mode, you need to press the battery start button shown below. Please refer to *6.2.2 Battery Mode Start-up Procedures*.

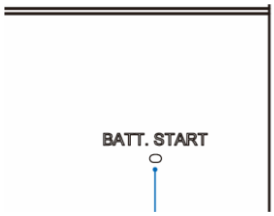

Figure 4-13: Battery Start Button

4.2 Communication Interfaces (II): at the Rear of the Touch Panel

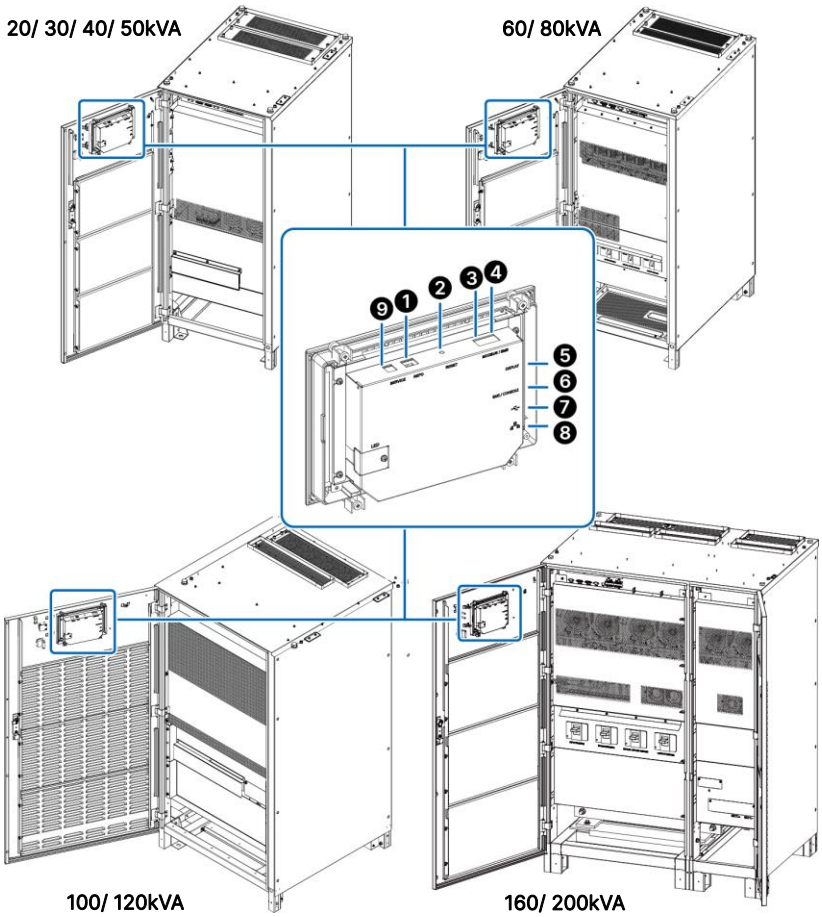

Figure 4-14: Communication Interfaces (II)

No.	Item	Description
❶	REPO	Before shipment, the **REPO** port has been connected.
❷	RESET	Press the **RESET** button to restart the LCD.
❸	MODBUS (RS-485 Port)	1. Provision of Modbus RTU communication service. 2. Connect the port to a user-supplied monitoring system.
❹	BMS	Reserved.
❺	DISPLAY	Before shipment, the **DISPLAY** port has been connected.
❻	EMS/ CONSOLE	Connect the port to a user-supplied environmental monitoring system or Delta EnviroProbe 1000 (optional).
❼	(USB Port × 1)	Connect a user-supplied USB flash drive to the port to (1) upgrade the UPS and LCD's firmware and (2) download event logs.
❽	(Network Port)	1. Provision of network communication service (including SNMP, Modbus TCP, HTTP, HTTPS, etc.). 2. Connect the port to a user-supplied monitoring system.
❾	SERVICE	Before shipment, the **SERVICE** port has been connected. For its function, please contact service personnel.

4.3 Cable Routing for the Communication Interfaces

NOTE:

1. Please follow local and national electrical codes to select cable sizes and install proper conduits and bushings for cable protection.
2. Only when *5.4 Installation* is completed can you perform wiring.
3. Cable ties are user-supplied and the quantity depends on on-site requirements.

For the cables that need to be connected to the communication interfaces, **ONLY** bottom cable entry is applicable. Please follow the steps below.

Step 1

Make sure that you have followed Step 1 ~ Step 5 mentioned in *5.4.1 Single Unit Installation* to complete the installation procedures before you perform cable routing for the communication interfaces.

Step 2

Make sure that all breakers are in the **OFF** position and there is no power supplied to the UPS.

Step 3

❶ Open the UPS's front door and ❷ remove the lateral rodent shield's wiring cover. ❸ Connect the cables to the communication interfaces (please see Step 4 for details) and ❹ route the cables through the lateral rodent shield.

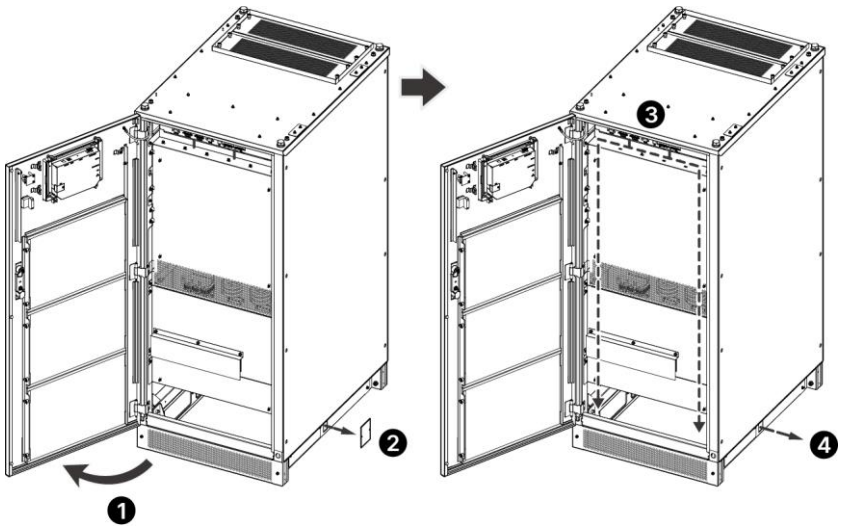

Figure 4-15: 20/ 30/ 40/ 50kVA UPS_ Bottom Cable Entry for the Communication Interfaces

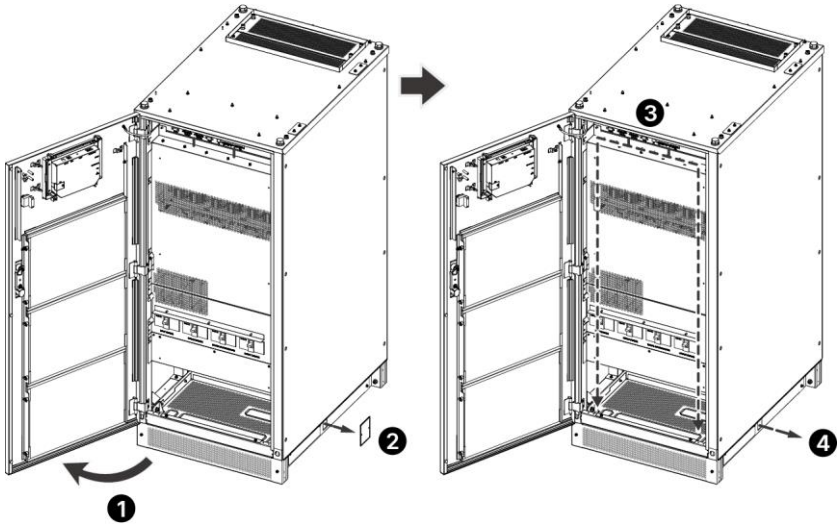

Figure 4-16: 60/ 80kVA UPS_ Bottom Cable Entry for the Communication Interfaces

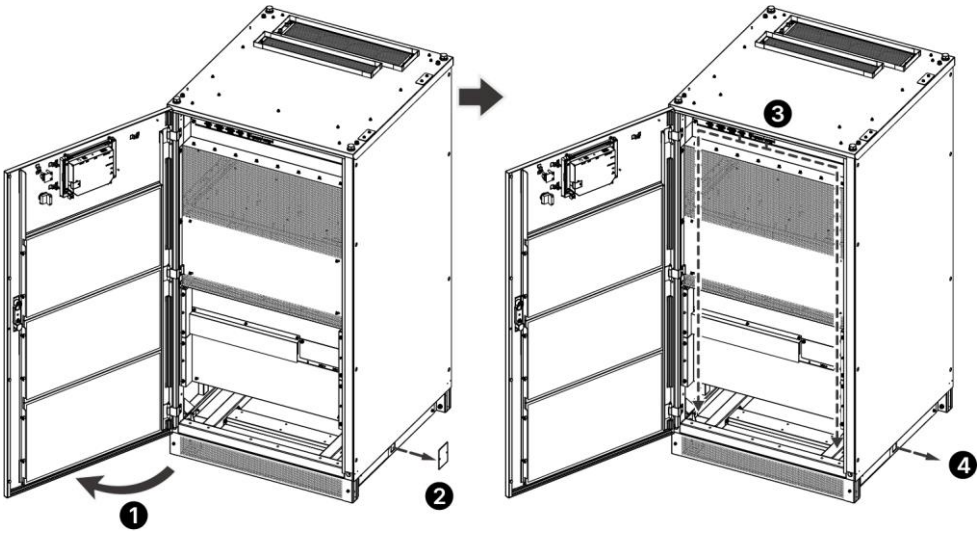

Figure 4-17: 100/ 120kVA UPS_ Bottom Cable Entry for the Communication Interfaces

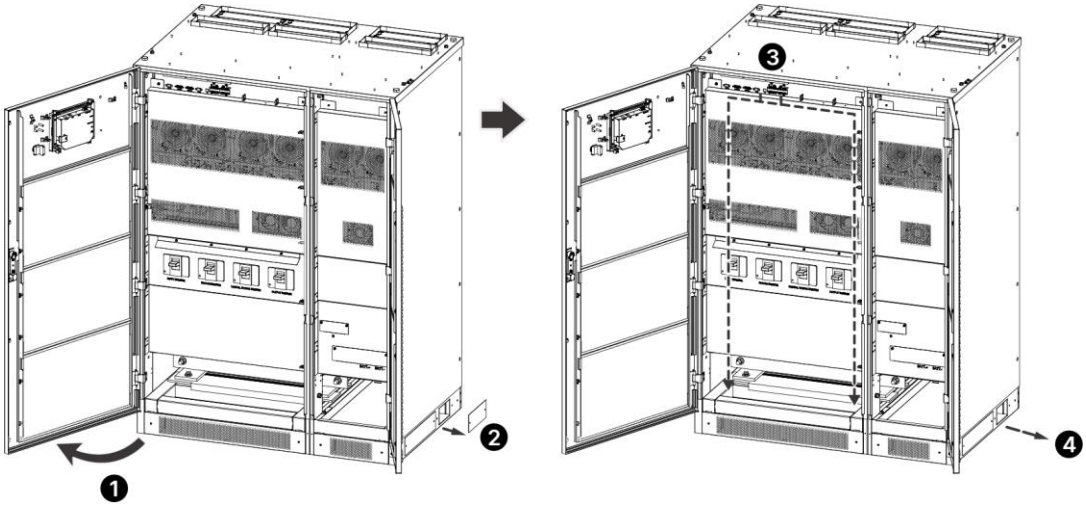

Figure 4-18: 160/ 200kVA UPS_ Bottom Cable Entry for the Communication Interfaces

Step 4

Take out the 10-pin and 6-pin terminal blocks from the provided package.

For 10-pin terminal block, ❶ use a flathead screwdriver to lose the screw on the terminal block shown, ❷ insert a 0.2 ~ 1.5 mm² (14 ~ 28 AWG) wire with the strip length of 6 ~ 7 mm (0.24” ~ 0.27”) into the wiring hole and ❸ fix the screw with the tightening torque of 1.94 kgf-cm (1.68 lb-in) to ensure that the wire is firmly connected. After completion, ❹ insert the 10-pin terminal block into the communication interfaces (I) and use a flathead screwdriver to tighten the screws on both sides of the terminal block with the tightening torque of 1.94 kgf-cm (1.68 lb-in).

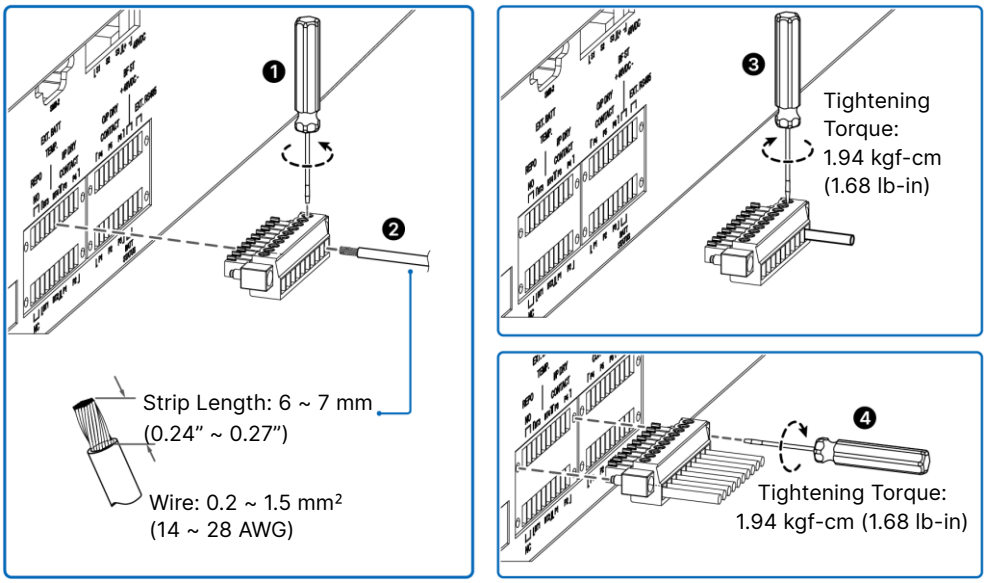

Figure 4-19: How to Connect Wires to the 10-pin Terminal Block and Insert the Terminal Block into the Communication Interfaces (I)

For 6-pin terminal block, ❶ insert it into the BMS & MODBUS port, ❷ use a flathead screwdriver to press the groove on the terminal block shown, ❸ insert a 0.2 ~ 1.31 mm^2 (14 ~ 24 AWG) wire into the wiring hole and release the screwdriver. Please note that the strip length should be 10 mm (0.39”).

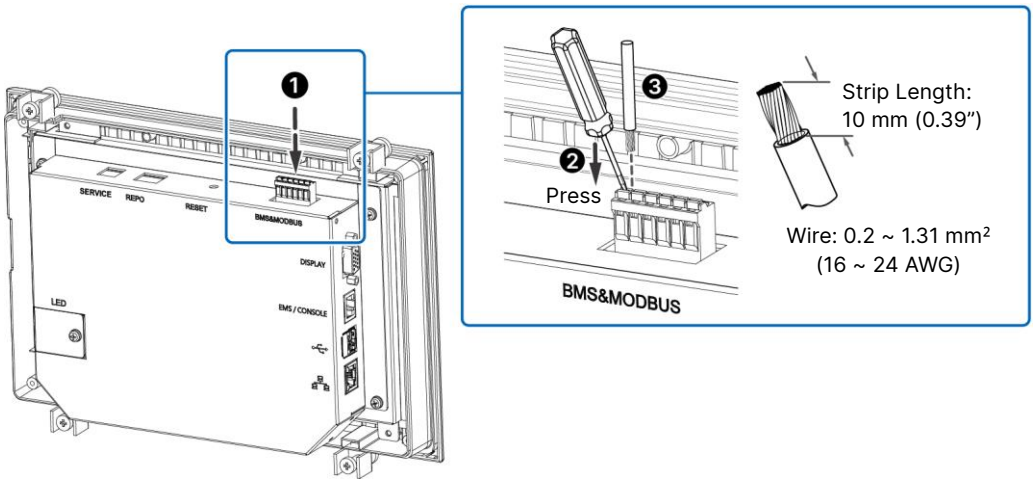

Figure 4-20: How to Connect Wires to the 6-pin Terminal Block and Insert the Terminal Block into the BMS & MODBUS Port

For other communication interface wiring, please use corresponding cables to plug them into the corresponding ports directly.

NOTE:

For input and output wiring, please refer to *5.5 Wiring*.

Chapter 5 : Installation and Wiring

5.1 Before Installation and Wiring

- Please read this user manual thoroughly before installation, wiring and operation. Only authorized Delta engineers or service personnel can perform installation, wiring, panel & cover removal, maintenance and operation. If you want to execute any action mentioned above by yourself, the action must be under the supervision of authorized Delta engineers or service personnel. If you use a forklift or other equipment to move the UPS, please make sure its load bearing is sufficient. Please refer to *Table 5-1*.
- The UPS must be connected to at least one external battery cabinet (user-supplied, handled and configured by Delta service personnel). Please refer to *5.6 External Battery Cabinet Connection Warnings* for relevant information.

5.2 Installation Environment

- Install the UPS indoors. Do not place it outdoors.
- Make sure that transportation routes (e.g. corridors, door gates, elevators, etc.) and installation area can accommodate and bear the weight of the UPS, external battery cabinet(s) and handling equipment. Please refer to *Table 5-1* for the floor weight loading information.

Table 5-1: UPS Floor Weight Loading Table

UPS Capacity	20kVA/ 18kW 30kVA/ 27kW	40kVA/ 36kW 50kVA/ 45kW	60kVA/ 54kW 80kVA/72kW	100kVA/ 90kW 120kVA/ 108kW	160kVA/ 144kW 200kVA/ 180kW
UPS Net Weight	336 kg (740.8 lb)	404 kg (890.7 lb)	456.5 kg (1006.4 lb)	593 kg (1307.3 lb)	1200 kg (2645.6 lb)
Floor Weight Loading	674.7 kg/ m^2 (138.2 lb/ ft^2)	811.2 kg/ m^2 (166.1 lb/ ft^2)	916.7 kg/ m^2 (187.8 lb/ ft^2)	893.1 kg/ m^2 (182.9 lb/ ft^2)	1204.8 kg/ m^2 (246.8 lb/ ft^2)

- Ensure that the installation area is spacious enough for ventilation, wiring and maintenance. Install the external battery cabinet next to the UPS. For the UPS clearance, Delta suggests the following:
  1. Keep a minimum distance of 800 mm (31.5") from the front of the UPS for wiring, maintenance and ventilation.
  2. Keep a minimum distance of 1000 mm (39.4") from the top of the UPS for maintenance. If you install wind shields on the top of the UPS, please ensure that the openings of the wind shields are sufficient and try to minimize the length of the wind shields.

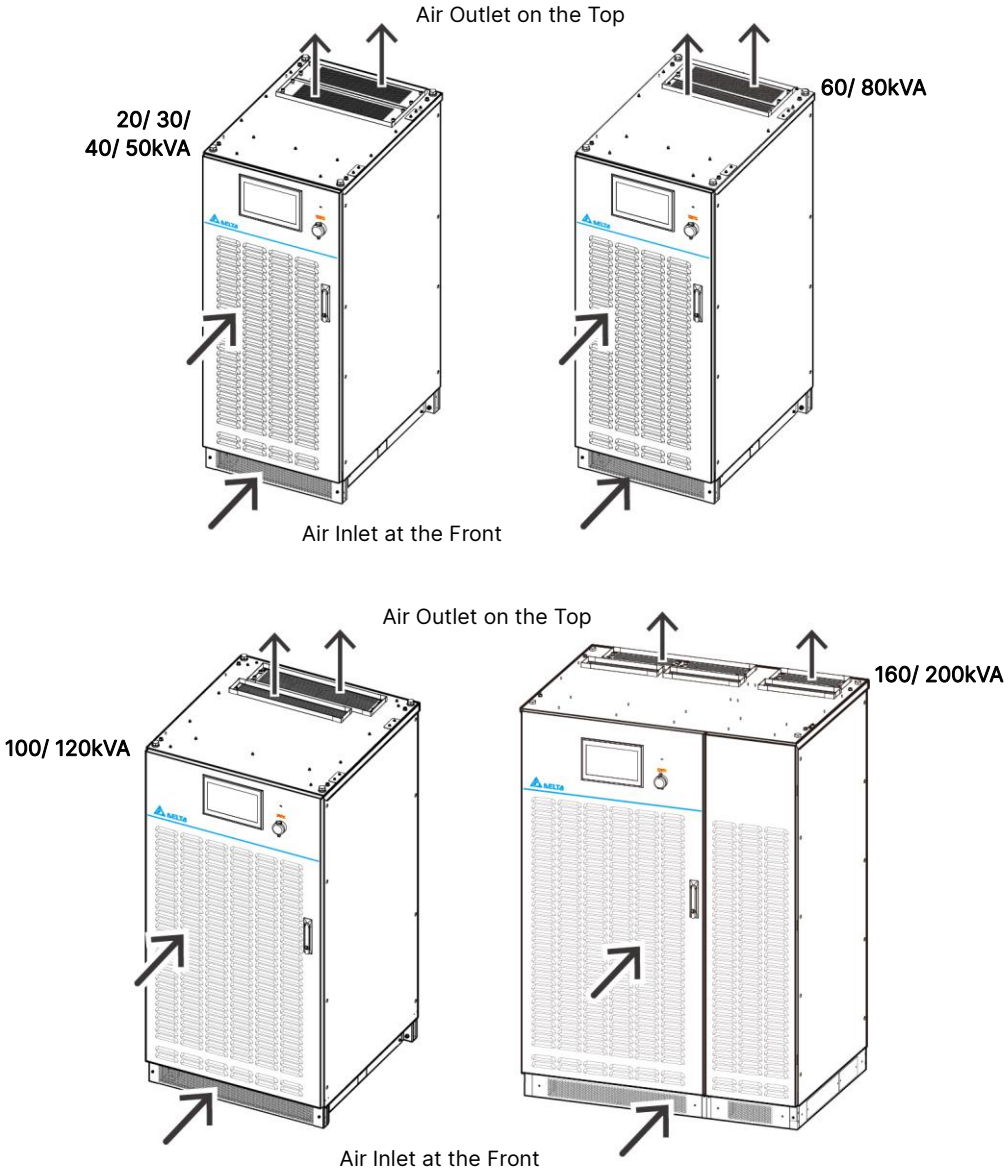

Figure 5-1: Air Inlet & Outlet Direction

WARNING:

1. Do not use air conditioners or similar equipment to blow into the top of the UPS.
2. Do not hinder ventilation of the UPS.

- Keep the installation area clean. Please note that wiring routes must be hermetic to prevent possible damage from rodents.

- Keep the installation area's temperature around 25°C (77°F) and humidity within 90%. The highest operating altitude is 1000 m (3280 ft) above sea level.
- For safety concerns, Delta suggests the following:
  1. Equip surroundings of the installation area with CO_2 or dry powder fire extinguishers.
  2. Install the UPS in an environment where fireproof materials are used to construct the walls, floors and ceilings.
  3. Install the UPS on a floor that is made from noncombustible materials.
- Do not allow unauthorized personnel entering the installation area and assign specified personnel to keep the UPS keys.

5.3 Transportation

NOTE:

1. Please strictly follow the instructions below to transport or handle the product.
2. When transporting or handling the product, please wear appropriate protective equipment and follow the safety instructions applicable to the working area.
3. Delta is not liable for any damages caused by improper handling or transportation. This includes failing to follow the instructions in the manual and other applicable regulations and standards (e.g. transportation, occupational health and other safety standards).

Before relocating this equipment to the installation site, follow the instructions below and plan the transportation route.

- The forks must fully bear the load of the equipment with their entire length. During transportation or handling process, keep the load's center of gravity stable and avoid uneven loading.
- Ensure that passages, floors, elevators, or ramps along the transportation route can withstand the weight of the equipment and handling devices. Leave sufficient clearance along the transportation route to avoid collisions and clear all obstacles from the transportation route.

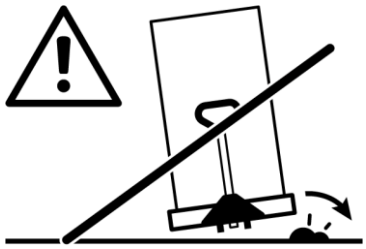

Figure 5-2: Clear All Obstacles from the Transportation Route

- During the transportation or handling process, please pay attention to the stability of the equipment to prevent it from sliding or tipping. When driving down a ramp, move in a backward direction.

Figure 5-3: Pay Attention to the Stability of the Equipment

- Keep personnel clear of the transportation route to avoid accidents.

Figure 5-4: Keep Personnel Clear of the Transportation Route

5.4 Installation

There are two installation applications, single unit and parallel units. If you want to install single unit, please follow *5.4.1 Single Unit Installation*. If you want to install at least two units and parallel them together, please follow *5.4.2 Parallel Units Installation*.

5.4.1 Single Unit Installation

NOTE:

1. Please use appropriate equipment (e.g. forklift) to move the UPS.
2. The installation steps and methods for 20/ 30/ 40/ 50 kVA UPS, 60/ 80 kVA UPS, 100/ 120 kVA and 160/ 200 kVA UPS are the same. Below, the illustration of 100/ 120 kVA UPS will be used as an example. If there are any different installation steps and methods, the difference will be illustrated additionally.

Please follow the steps below:

Step 1

Before installing the UPS in the designated installation area, please confirm whether the area has sufficient floor weight loading to bear the UPS, external battery cabinet(s) and handling equipment (e.g. forklift) to avoid accidents. Please refer to *Table 5-1*.

If you want to use a crane to lift the UPS, please follow the figures below to remove the M16 screws and washers and assemble the M16 lifting eye bolts (tightening torque : 250 ± 10 kgf-cm (217 ± 8.7 lb-in)).

NOTE:

1. For 20/ 30/ 40/ 50kVA UPS, you need to install the M16 flat washers before installing the M16 lifting eye bolts.
2. The M16 flat washers (only for 20/ 30/ 40/ 50kVA) and M16 lifting eye bolts should be provided by users.

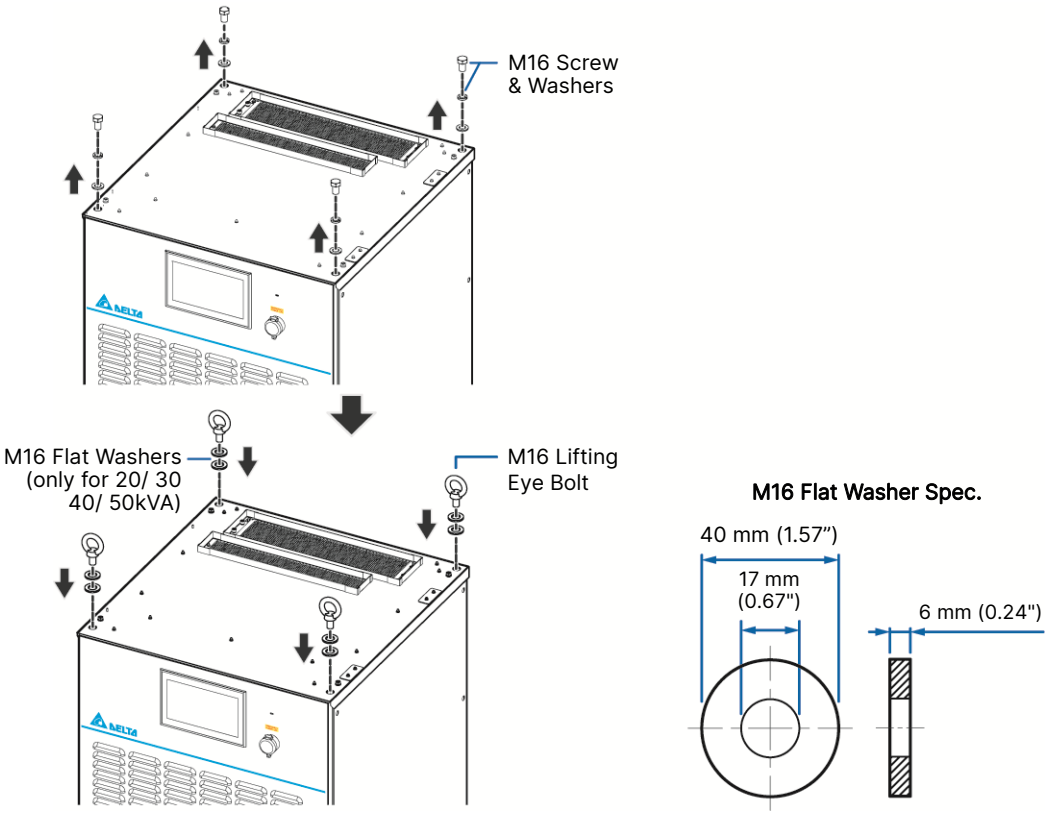

Figure 5-5: Installation of M16 Lifting Eye Bolts

Step 2

Move the UPS to the designated installation area. Please note that the UPS must stand on the floor stably and levelly without any tipping.

Step 3

Refer to the figures below for the information about cabinet floor fixing points.

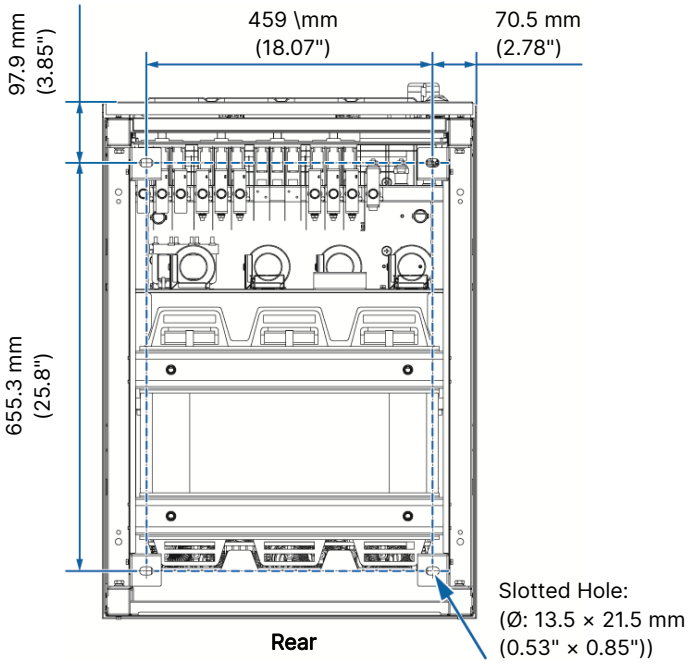

Figure 5-6: 20/ 30/ 40/ 50kVA UPS_ Cabinet Floor Fixing Points

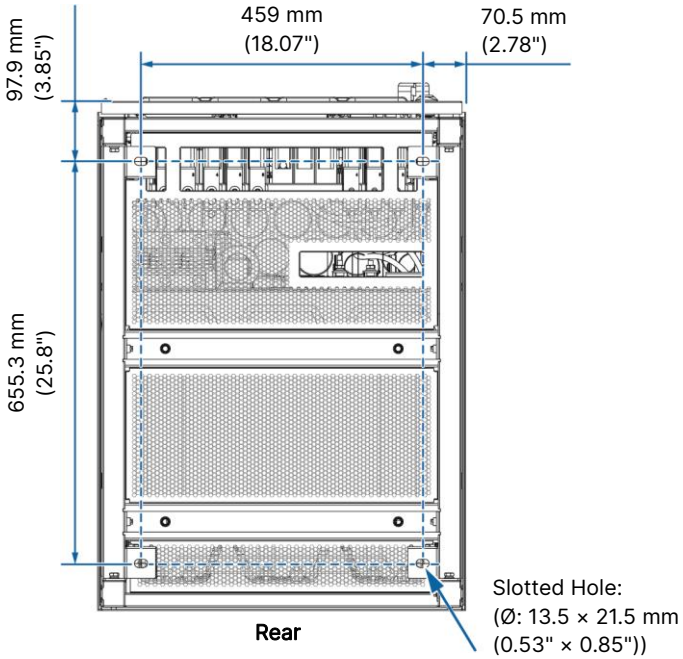

Figure 5-7: 60/ 80kVA UPS_ Cabinet Floor Fixing Points

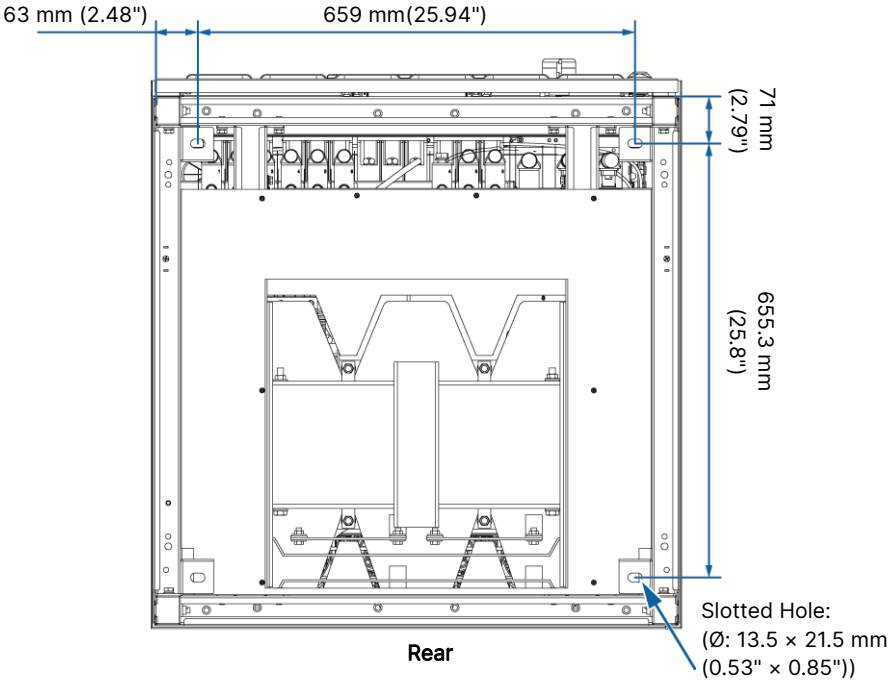

Figure 5-8: 100/ 120kVA UPS_ Cabinet Floor Fixing Points

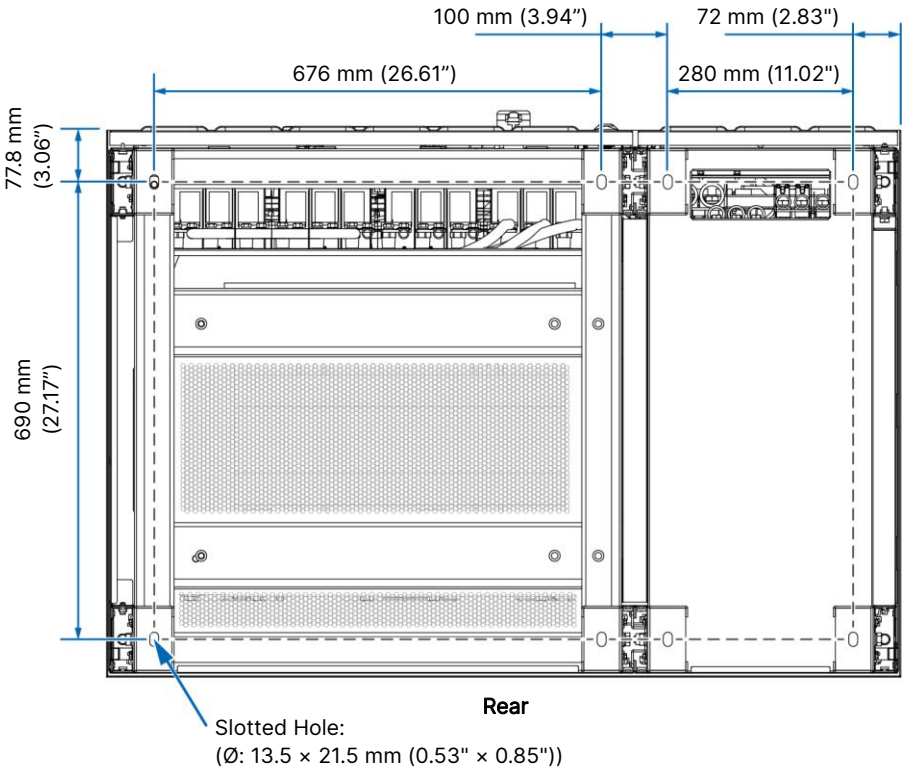

Figure 5-9: 160/ 200kVA UPS_ Cabinet Floor Fixing Points

Step 4

- **For installation not against the wall:**

  Use four M10 expansion bolts, four washers and four nuts (provided by service personnel) to fix the UPS's four balance brackets (two at the front and two at the rear) on the ground.

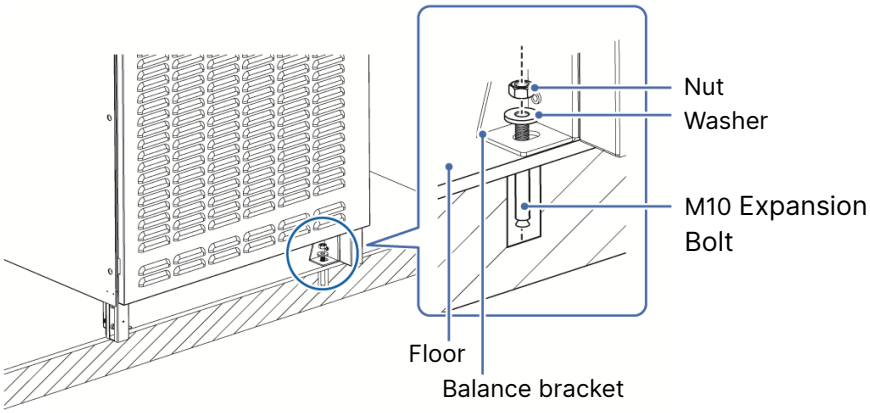

Figure 5-10: 100/ 120kVA UPS_ Fix the Balance Bracket on the Ground

- **For installation against the wall:**

  (1) Use two M10 expansion bolts, two washers and two nuts (provided by service personnel) to fix the UPS's two front balance brackets on the ground. Please refer to *Figure 5-10*. Please note that there is no need to install the balance brackets at the rear of the cabinet.

  (2) For 20/ 30/ 40/ 50/ 60/ 80/ 100/ 120kVA UPS, unscrew the two M8 screws (already fixed on the top of the cabinet), take out the two wall brackets from the package bag and use the removed two M8 screws to install the two wall brackets on the top left and top right of the cabinet. The tightening torque of M8 screw should be 150 ± 5 kgf-cm (130 ± 4.3 lb-in).

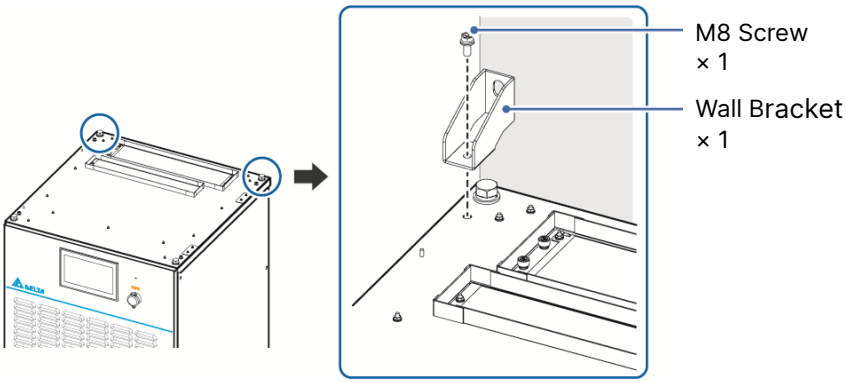

Figure 5-11: 100/ 120kVA UPS_ Install the Wall Bracket on the Top of the Cabinet

For 160/ 200kVA UPS, unscrew the two M16 screws (already fixed on the top of the cabinet), take out the two wall brackets from the package bag and use the removed two M16 screws to install the two wall brackets on the top left and top right of the cabinet. The tightening torque of M16 screw should be 250 ± 5 kgf-cm (217 ± 4.3 lb-in).

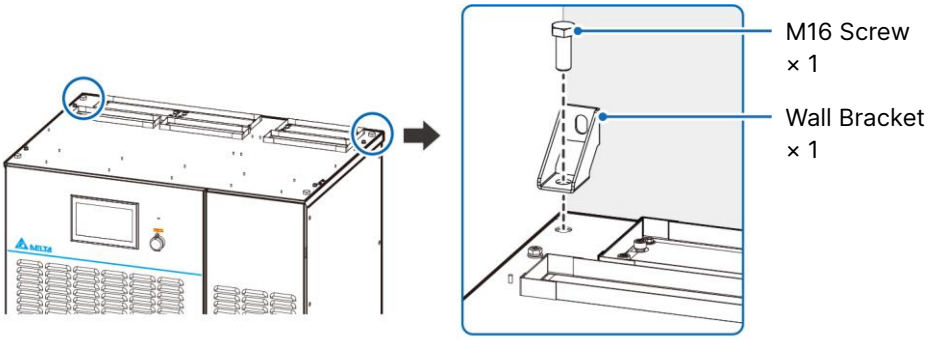

Figure 5-12: 160/ 200kVA UPS_ Install the Wall Bracket on the Top of the Cabinet

(3) Use two M10 expansion bolts, two plain washers, two spring washers and two nuts (provided by service personnel) to fix the two wall brackets against the wall.

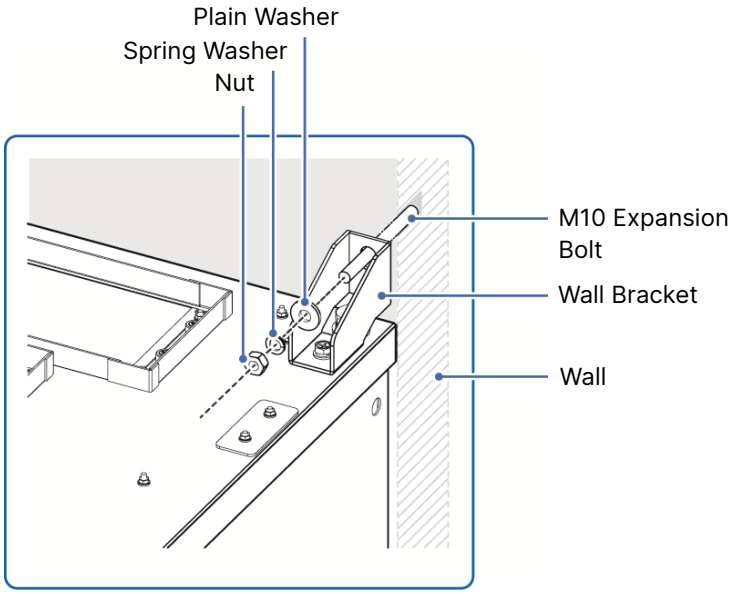

Figure 5-13: 100/ 120kVA UPS_ Install the Wall Bracket against the Wall

WARNING:

If you don't fix the UPS's balance brackets on the ground, the UPS might topple over. For safety concerns, please fix the UPS's balance brackets on the ground firmly.

Step 5

Follow *5.7 Installation of Rodent Shields* to install the rodent shields.

Step 6

After completing the above steps, follow the instructions in *4.3 Cable Routing for the Communication Interfaces* and *5.5 Wiring* to perform wiring. When connecting to the external battery cabinet(s), please refer to *5.6 External Battery Cabinet Connection Warnings* to perform external battery cabinet wiring. After routing the cables and verifying cable connections, seal or cover the gaps between the cables and the cabinet(s) to avoid foreign materials falling into the UPS. After that, reinstall the removed panels and close the front door if necessary.

5.4.2 Parallel Units Installation

NOTE:

Please use appropriate equipment (e.g. forklift) to move the UPS.

- **For 20/ 30/ 40/ 50/ 60/ 80/ 100/ 120kVA UPS, please follow the steps below.**

Step 1

Follow Step 1 ~ Step 5 mentioned in *5.4.1 Single Unit Installation*.

Step 2

Follow the figures below to remove the two upper parallel plates (including four M4 nuts) and use them to join the top of the UPSs that need to be parallelled.

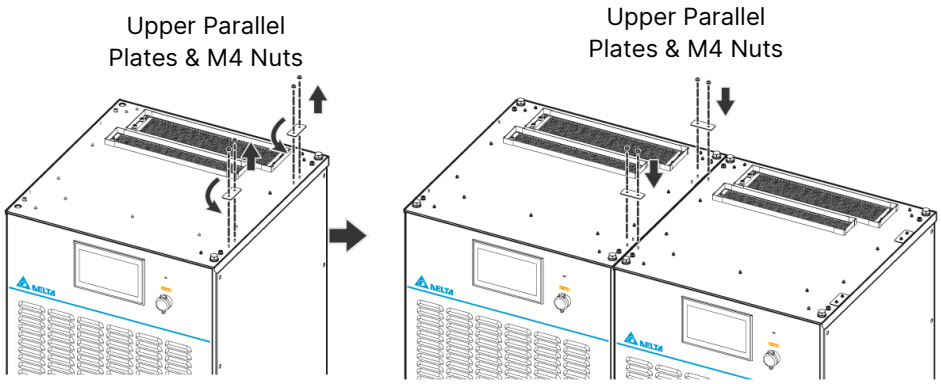

Figure 5-14: Join the Top of the UPSs that Need to be Parallelled

Step 3

Remove the front and rear rodent shields.

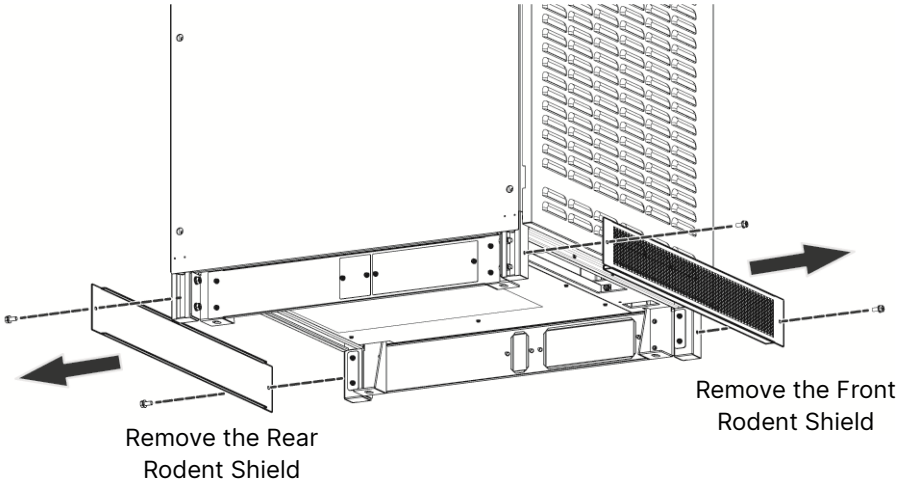

Figure 5-15: Remove the Front and Rear Rodent Shields

Step 4

Remove the two lower parallel plates from the cabinet's two right feet.

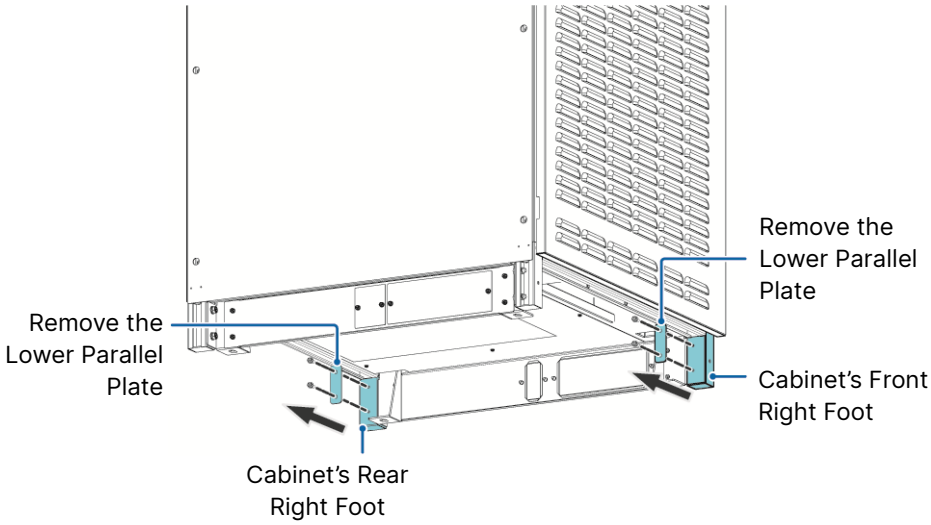

Figure 5-16: Remove the Two Lower Parallel Plates from the Cabinet's Two Right Feet

Step 5

Re-install the front and rear rodent shields. After that, install the two lower parallel plates on the front and rear rodent shields.

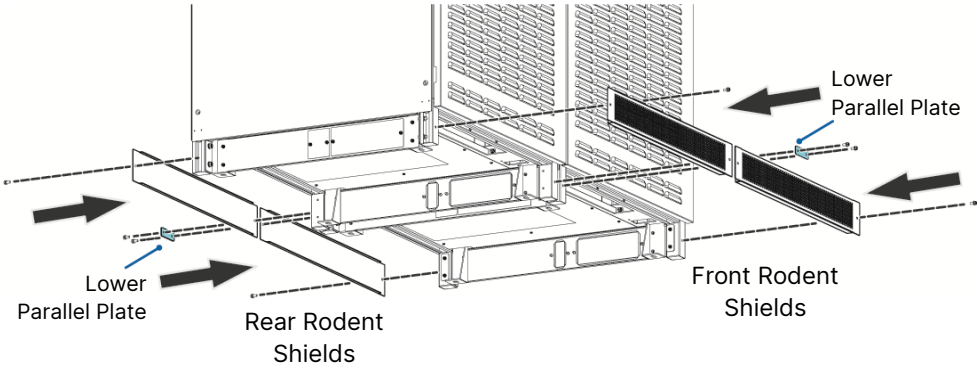

Figure 5-17: Install the Two Lower Parallel Plates on Front and Rear Rodent Shields

- **For 160/ 200kVA UPS, please follow the steps below.**

Step 1

Follow Step 1 ~ Step 5 mentioned in *5.4.1 Single Unit Installation*.

Step 2

Follow the figures below to remove the upper parallel plate (including two M4 nuts) and use them to join the top of the UPSs that need to be parallelled.

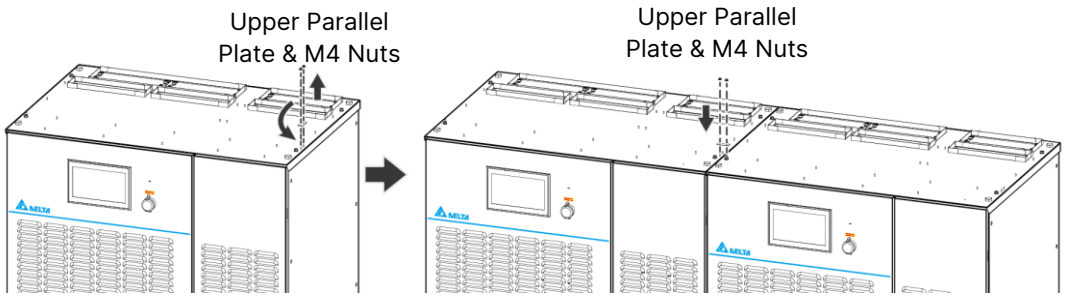

Figure 5-18: Join the Top of the UPSs that Need to be Parallelled

Step 3

Remove the lower parallel plate from the cabinet's front right foot.

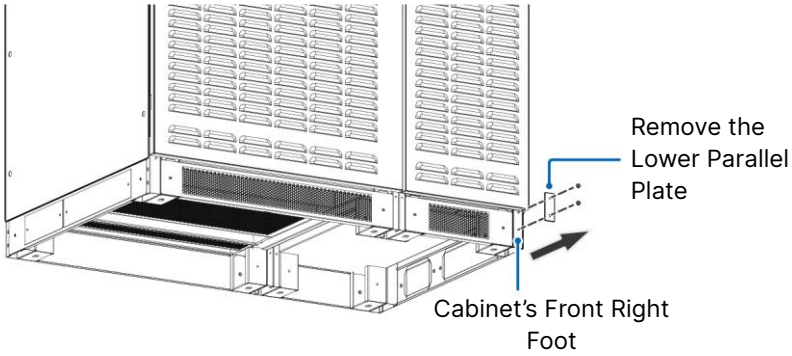

Figure 5-19: Remove the Lower Parallel Plate from the Cabinet's Front Right Foot

Step 4

Use the lower parallel plate to join the bottom of the UPSs that need to be parallelled.

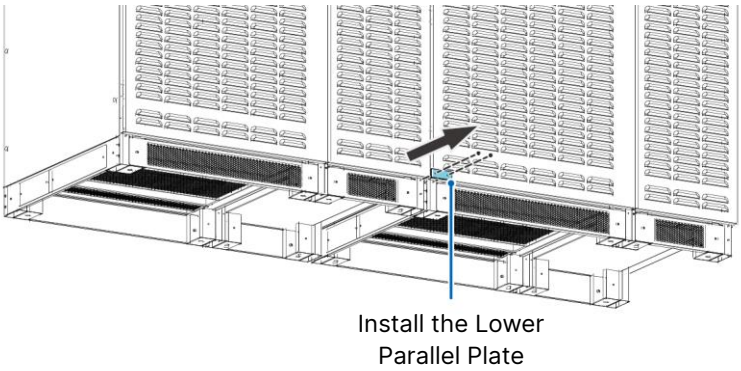

Figure 5-20: Join the Bottom of the UPSs that Need to be Parallelled

5.5 Wiring

5.5.1 Pre-wiring Warnings

NOTE:

1. Before wiring, please ensure that you have followed *5.4 Installation* to fix the UPS in the designated installation area firmly.
2. Before wiring, please read *5.5 Wiring* thoroughly.
3. Only authorized Delta engineers or service personnel can perform installation, wiring, panel & cover removal, maintenance and operation. If you want to execute any action mentioned above by yourself, the action must be under the supervision of authorized Delta engineers or service personnel.
4. During wiring procedures, please protect the UPS from foreign materials falling into the cabinet(s).

- Before wiring or making any electrical connection, make sure that the power supplied to the input and output of the UPS is cut off completely.
- Check if the size, diameter, phase and polarity are correct for each cable connected to the UPS and external battery cabinet(s). Please refer to *Table 5-2*.

NOTE:

Table 5-2 is based on (1) default input/ output voltage: 380 V, (2) default battery Q'ty: 40 PCS and (3) maximum charge current. For other conditions different from *Table 5-2*, please contact Delta service personnel for relevant values.

Table 5-2: Specifications of Input/ Output/ Battery Cables (Copper) and Breakers

UPS Capacity			20kVA/ 18kW	30kVA/ 27kW	40kVA/ 36kW	50kVA/ 45kW	60kVA/ 54kW	80kVA/ 72kW
Input	Nominal Current at 380 V		38 A	58 A	71 A	87 A	98 A	130 A
	Maximum Input Current*[1]		40 A	60 A	76 A	94 A	115 A	151 A
	Recommended cable size	(L1/ L2/ L3/ N)	10 mm^2 × 1 PC (19.7 kcmil × 1 PC)	16 mm^2 × 1 PC (31.6 kcmil × 1 PC)	25 mm^2 × 1 PC (49.3 kcmil × 1 PC)	35 mm^2 × 1 PC (69 kcmil × 1 PC)	50 mm^2 × 1 PC (98.7 kcmil × 1 PC)	70 mm^2 × 1 PC (138.2 kcmil × 1 PC)

UPS Capacity			20kVA/ 18kW	30kVA/ 27kW	40kVA/ 36kW	50kVA/ 45kW	60kVA/ 54kW	80kVA/ 72kW
Input (continued)	Maximum cable lug width		20 mm (0.79")				26 mm (1.02")	
	Screw size/ Cable lug inner diameter		M8/ 8.4 mm (0.33")				M10/ 10.5 mm (0.41")	
	Terminal type*2		RNB14-8	RNB22-8	SQNBS38-8		SQNBS60-10	SQNBS80-10
Bypass	Rated current at 380 V		33 A	48 A	67 A	79 A	94 A	124 A
	Recommended cable size	(L1/ L2/ L3/ N)	6 mm^2 × 1 PC (11.8 kcmil × 1 PC)	10 mm^2 × 1 PC (19.7 kcmil × 1 PC)	25 mm^2 × 1 PC (49.3kcmil × 1 PC)		50 mm^2 × 1 PC (98.7 kcmil × 1 PC)	
	Maximum cable lug width		20 mm (0.79")				26 mm (1.02")	
	Screw size/ Cable lug inner diameter		M8/ 8.4 mm (0.33")				M10/ 10.5 mm (0.41")	
	Terminal type*2		RNB8-8	RNB14-8	SQNBS38-8		SQNBS60-10	
Output	Rated current at 380 V		32 A	46 A	61 A	76 A	91 A	122 A
	Recommended cable size	(L1/ L2/ L3/ N)	6 mm^2 × 1 PC (11.8 kcmil × 1 PC)	10 mm^2 × 1 PC (19.7 kcmil × 1 PC)	16 mm^2 × 1 PC (31.6 kcmil × 1 PC)	25 mm^2 × 1 PC (49.3 kcmil × 1 PC)	50 mm^2 × 1 PC (98.7 kcmil × 1 PC)	
	Maximum cable lug width		20 mm (0.79")				26 mm (1.02")	
	Screw size/ Cable lug inner diameter		M8/ 8.4 mm (0.33")				M10/ 10.5 mm (0.41")	
	Terminal type*2		RNB8-8	RNB14-8	SQNBS22-8	SQNBS38-8	SQNBS60-10	

UPS Capacity			20kVA/ 18kW	30kVA/ 27kW	40kVA/ 36kW	50kVA/ 45kW	60kVA/ 54kW	80kVA/ 72kW
Battery	Nominal discharge current (condition: 2 V per cell)		46 A	69 A	88 A	110 A	120 A	167 A
	Maximum discharge current (condition: 1.75 V per cell)		52 A	77 A	91 A	113 A	140 A	190 A
	Recommended cable size	(+/ -)	10 mm^2 × 1 PC (19.7 kcmil × 1 PC)	25 mm^2 × 1 PC (49.3 kcmil × 1 PC)	35 mm^2 × 1 PC (69.1 kcmil × 1 PC)	50 mm^2 × 1 PC (98.7 kcmil × 1 PC)	70 mm^2 × 1 PC (138.1 kcmil × 1 PC)	95 mm^2 × 1 PC (187.5 kcmil × 1 PC)
	Maximum cable lug width		20 mm (0.79")				28 mm (1.10")	
	Screw size/ Cable lug inner diameter		M8/ 8.4 mm (0.33")				M10/ 10.5 mm (0.41")	
	Terminal type*[2]		RNB14-8	RNBS38-8	SQNBS38 -8	SQNBS60 -8	SQNBS80 -10	SQNBS100 -10
Cable Q'ty			2 PCS per conduit					
Tightening Torque			M8 = 150 ± 5 kgf-cm (130 ± 4.3 lb-in)				M10 = 250 ± 10 kgf-cm (217 ± 8.7 lb-in)	
Input Breaker (Q1)*[3]			600 V/ 40 A	600 V/ 60 A	600 V/ 100 A		600 V/ 160 A	600 V/ 40 A
Bypass Breaker (Q2)*[3]			600 V/ 40 A	600 V/ 60 A	600 V/ 100 A		600 V/ 160 A	600 V/ 40 A
Manual Bypass Breaker (Q3)*[3]			600 V/ 40 A	600 V/ 60 A	600 V/ 100 A		600 V/ 160 A	600 V/ 40 A
Output Breaker (Q4)*[3]			600 V/ 40 A	600 V/ 60 A	600 V/ 100 A		600 V/ 160 A	600 V/ 40 A

UPS Capacity			100kVA/ 90kW	120kVA/ 108kW	160kVA/ 144kW	200kVA/ 180kW
Input	Nominal Current at 380 V		171 A	200 A	264 A	333 A
	Maximum Input Current*1		184 A	218 A	290 A	363 A
	Recommended cable size	(L1/ L2/ L3/ N)	95 mm^2 × 1 PC (187.5 kcmil × 1 PC)	120 mm^2 × 1 PC (236.8 kcmil × 1 PC)	240 mm^2 × 1 PC (473.6 kcmil × 1 PC)	300 mm^2 × 1 PC (592 kcmil × 1 PC)
	Maximum cable lug width		35 mm (1.37")		40 mm (1.57")	
	Screw size/ Cable lug inner diameter		M10/ 10.5 mm (0.41")		M12/ 13 mm (0.51")	
	Terminal type*2		SQNBS100-10	SQNBS125-10	SQNBS250-12	SQNBS325-12
Bypass	Rated current at 380 V		155 A	186 A	245 A	306 A
	Recommended cable size	(L1/ L2/ L3/ N)	70 mm^2 × 1 PC (138.1 kcmil × 1 PC)	95 mm^2 × 1 PC (187.5 kcmil × 1 PC)	150 mm^2 × 1 PC (296 kcmil × 1 PC)	240 mm^2 × 1 PC (473.6 kcmil × 1 PC)
	Maximum cable lug width		35 mm (1.37")		40 mm (1.57")	
	Screw size/ Cable lug inner diameter		M10/ 10.5 mm (0.41")		M12/ 13 mm (0.51")	
	Terminal type*2		SQNBS80-10	SQNBS100-10	SQNBS150-12	SQNBS250-12
Output	Rated current at 380 V		152 A	182 A	242 A	303 A
	Recommended cable size	(L1/ L2/ L3/ N)	70 mm^2 × 1 PC (138.1 kcmil × 1 PC)	95 mm^2 × 1 PC (187.5 kcmil × 1 PC)	150 mm^2 × 1 PC (296 kcmil × 1 PC)	240 mm^2 × 1 PC (473.6 kcmil × 1 PC)
	Maximum cable lug width		35 mm (1.37")		40 mm (1.57")	
	Screw size/ Cable lug inner diameter		M10/ 10.5 mm (0.41")		M12/ 13 mm (0.51")	

UPS Capacity			100kVA/ 90kW	120kVA/ 108kW	160kVA/ 144kW	200kVA/ 180kW
Output (continued)	Terminal type*[2]		SQNBS80-10	SQNBS100-10	SQNBS150-12	SQNBS250-12
Battery	Nominal discharge current (condition: 2 V per cell)		202 A	242 A	323 A	404 A
	Maximum discharge current (condition: 1.75 V per cell)		231 A	277 A	370 A	462 A
	Recommended cable size	(+/ -)	120 mm^2 × 1 PC (236.8 kcmil × 1 PC)	185 mm^2 × 1 PC (365.1 kcmil × 1 PC)	95 mm^2 × 2 PCS (187.5 kcmil × 2 PCS)	120 mm^2 × 2 PCS (236.8 kcmil × 2 PCS)
	Maximum cable lug width		36 mm (1.42")		36 mm (1.42")	
	Screw size/ Cable lug inner diameter		M10/ 10.5 mm (0.41")		M10/ 10.5 mm (0.41")	
	Terminal type*[2]		SQNBS125 -10	SQNBS200 -10	SQNBS100-10	SQNBS125 -10
Cable Q'ty			2 PCS per conduit			
Tightening Torque			M10 = 250 ± 10 kgf-cm (217 ± 8.7 lb-in)		M10 = 250 ± 10 kgf-cm (217 ± 8.7 lb-in)	
Input Breaker (Q1)*[3]			600 V/ 225 A		600 V/ 400 A	
Bypass Breaker (Q2)*[3]			600 V/ 225 A		600 V/ 400 A	
Manual Bypass Breaker (Q3)*[3]			600 V/ 225 A		600 V/ 400 A	
Output Breaker (Q4)*[3]			600 V/ 225 A		600 V/ 400 A	

NOTE:

1. Please follow local regulations to install proper conduits and bushings for cable protection.
2. Please refer to national and local electrical codes for acceptable protective devices and cable sizes.
3. *[1] At nominal input voltage and full charge.
4. *[2] The suggested manufacturer is K.S. TERMINAL INC. You may use equivalent terminals provided by other manufacturers.
5. *[3] The current is based on using 100% rated breakers.
6. According to the *Table B.52.2* listed in the IEC 60364-5-52 standard, the cables sizes listed in *Table 5-2* mentioned in this user manual meet the following minimum requirements:
   - Use of 70°C (158°F) copper wires.
   - The selection of cable sizes is based on the ambient temperature of 30°C (86°F). If the ambient temperature exceeds 30°C (86°F), please refer to the IEC standard to correct coefficient to select cable sizes with higher specifications.

- If there is a floating voltage between the input power's neutral (N) and the PE (protective earth) (⏚), and you require that the VNG of the UPS should be zero, Delta suggests that you install an isolation transformer in front of the input side of the UPS, and connect the isolation transformer's secondary neutral (N) to the PE (protective earth) (⏚) at the proximal end of the isolation transformer.
- The (main/ bypass) AC source must be a three-phase system and meets the specifications specified on the UPS rating label.
- Check the battery polarity when connecting the external battery cabinet(s) to the UPS. Do not reverse the battery polarity. For relevant information, please refer to *5.6 External Battery Cabinet Connection Warnings*.
- The UPS's PE terminal (⏚) must be grounded. Please use ring-type terminals when wiring.

WARNING:

1. Wrong wiring will cause damage to the UPS and electric shock.
2. If the UPS is not grounded, the power boards and components might be damaged after the UPS is powered on.

5.5.2 Single Input and Dual Input Modification

NOTE:

Only authorized Delta engineers or service personnel can modify single input and dual input setup.

The UPS default setting is single input. If you want to modify it into dual input, please follow the steps below.

Step 1

Open the UPS's front door and remove the breaker cover and wiring terminals' cover as shown in the figures below.

Step 2

For 20/ 30/ 40/ 50/ 60/ 80/ 100/ 120kVA UPS, remove the six screws and three cables connected between the AC Input terminals (L1/ L2/ L3) and the Bypass Input terminals (L1/ L2/ L3). After that, the dual input setup is completed.

For 160/ 200kVA UPS, remove the three nuts, three screws and three cables connected between the AC Input terminals (L1/ L2/ L3) and the Bypass Input terminals (L1/ L2/ L3). After that, the dual input setup is completed.

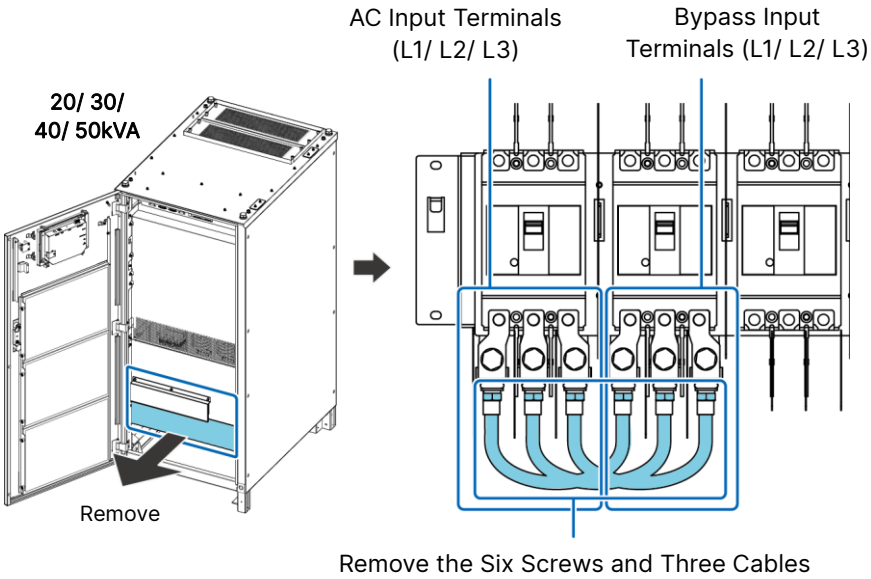

Figure 5-21: 20/ 30/ 40/ 50kVA UPS_ Remove the Six Screws and Three Cables Connected between the AC Input Terminals and Bypass Input Terminals

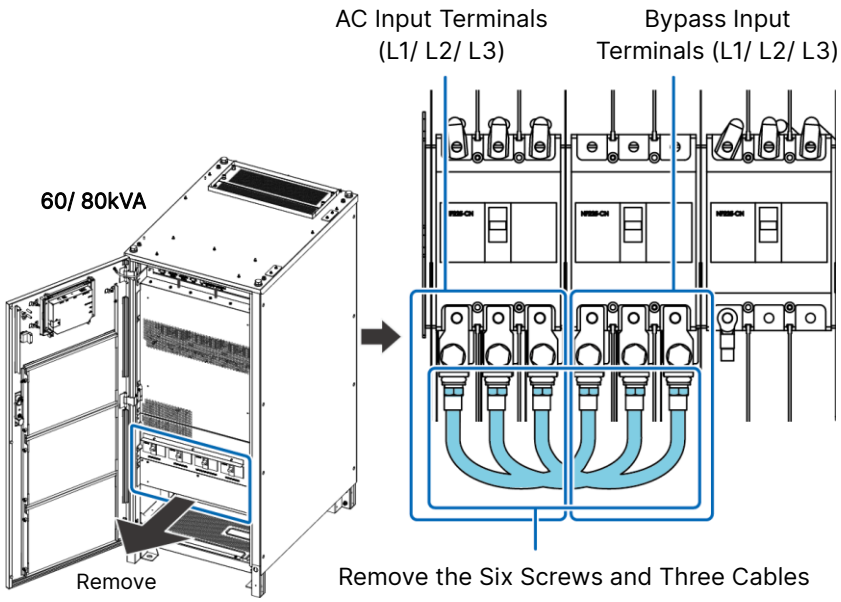

Figure 5-22: 60/ 80kVA UPS_ Remove the Six Screws and Three Cables Connected between the AC Input Terminals and Bypass Input Terminals

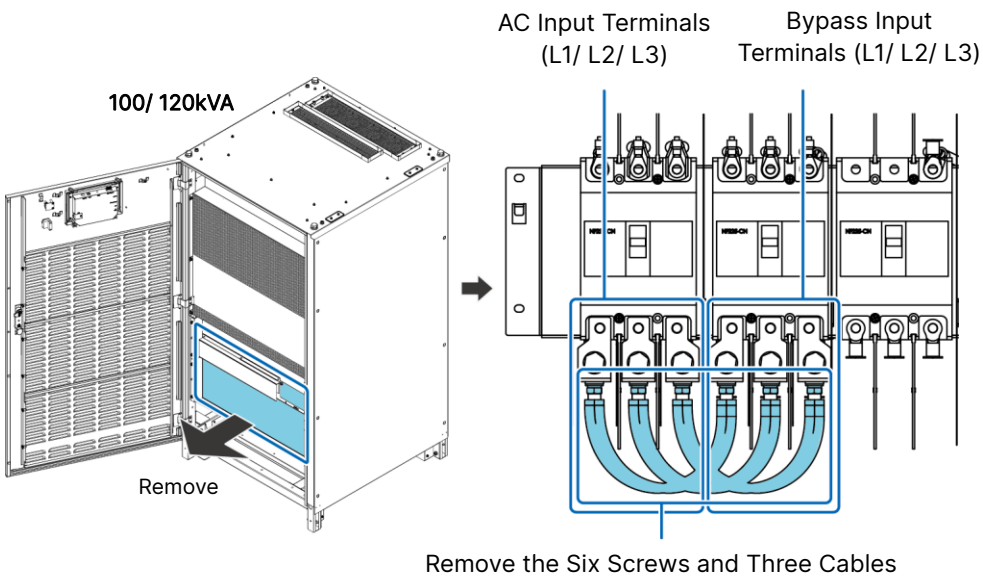

Figure 5-23: 100/ 120kVA UPS_ Remove the Six Screws and Three Cables Connected between the AC Input Terminals and Bypass Input Terminals

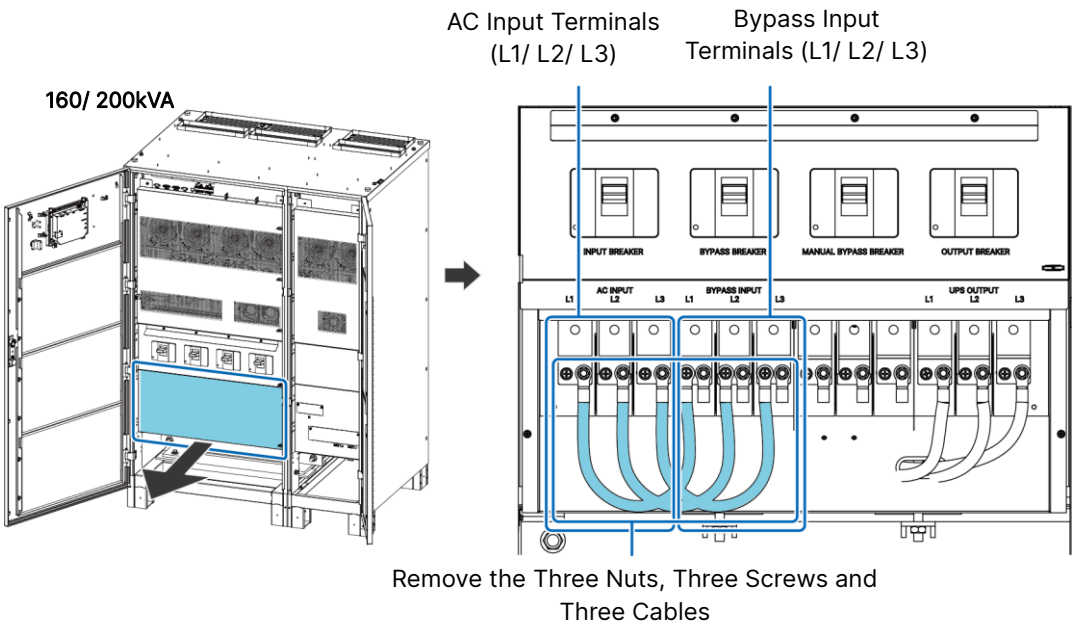

Figure 5-24: 160/ 200kVA UPS_ Remove the Three Nuts, Three Screws and Three Cables Connected between the AC Input Terminals and Bypass Input Terminals

NOTE:

Please keep the removed nuts, screws and cables properly for future use. If you want to modify the UPS from dual input into single input, please use the removed nuts, screws and cables to connect the AC Input terminals (L1/ L2/ L3) and Bypass Input terminals (L1/ L2/ L3).

5.5.3 Single Unit Wiring

NOTE:

Before wiring, please read *5.5 Wiring* thoroughly and make sure that relevant conditions have been met.

Refer to *Table 5-3* for information about the wiring terminals and wiring arrangement.

Table 5-3: UPS's Wiring Terminals & Wiring Information

No.	Item*1	Function
1	AC Input Terminals (L1/ L2/ L3)	• **Single Input:** Connect the terminals to the main AC source. • **Dual Input:** Connect the terminals to the main AC source.

No.	Item*1	Function
2	Bypass Input Terminals (L1/ L2/ L3)	• **Single Input:** Connect the terminals to the main AC source. • **Dual Input:** Connect the terminals to the bypass AC source.
3	UPS Output Terminals (L1/ L2/ L3)	Connect the terminals to the critical loads.
4	Battery Input Terminals (+/ -)	Connect the terminals to the external battery cabinet(s). Please contact Delta service personnel for battery configurations.
5	N Terminals	Only for 3P4W application. • **Single Input:** Connect the terminals to the main AC source's N and critical loads' N. • **Dual Input:** Connect the terminals to the bypass AC source's N and critical loads' N.
6	⏚ PE (protective earth) Terminal	It is protective earthing for protection against electrical shock in case of fault*2. The terminal must be connected to the main earth.
7	⏚ GND (ground) Terminals	The terminals are used to ground the devices, which are associated with UPS operation.

NOTE:

1. *1 Please refer to *Figure 2-4* ~ *Figure 2-7* for the terminals listed in the above '**Item**' column.
2. *2 The PE (protective earth) connection ensures that all exposed conductive surfaces are at the same electric potential as the Earth to avoid the risk of electrical shock due to leakage current or an insulation fault.

5.5.3.1 Single Input (Single Unit)

When there is only one AC power source, single unit wiring procedures are as follows.

<u>Step 1</u>

Make sure that the Input Breaker (Q1), Bypass Breaker (Q2), Manual Bypass Breaker (Q3) and the Output Breaker (Q4) are in the **OFF** position.

Step 2

Make sure that the external battery cabinet's breaker (Q5) is in the **OFF** position.

Step 3

Follow *5.7 Installation of Rodent Shields* to install the rodent shields.

Step 4

Follow *Table 5-2* to select proper input, output and battery cables.

Step 5

The UPS **ONLY** allows cable routing from the bottom. Please leave adequate space below the UPS. ❶ Open the UPS's front door, ❷ remove the wiring terminals' cover, ❸ remove the lateral rodent shield's wiring cover, ❹ connect the cables to the wiring terminals (see Step 6 , Step 7 and Step 8) and ❺ route the cables through the lateral rodent shield.

20/ 30/ 40/ 50kVA

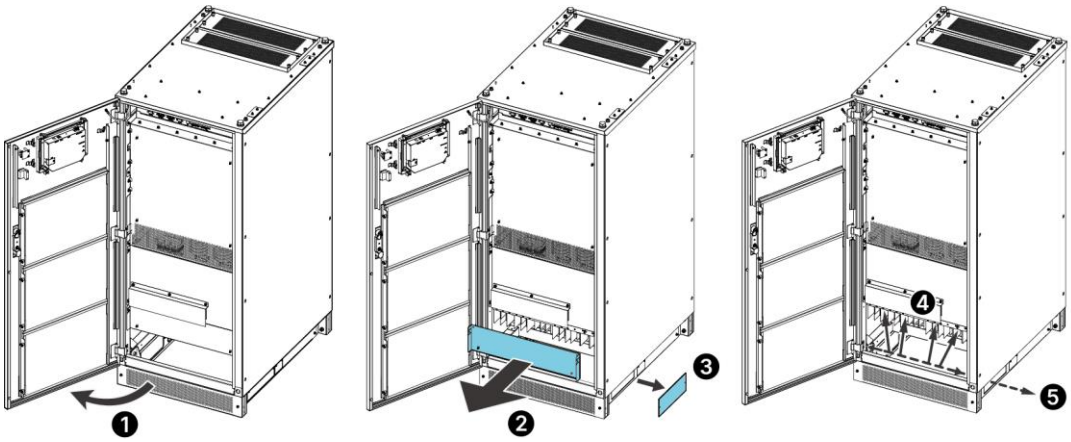

Figure 5-25: 20/ 30/ 40/ 50kVA UPS_ Bottom Cable Entry for the Wiring Terminals

60/ 80kVA

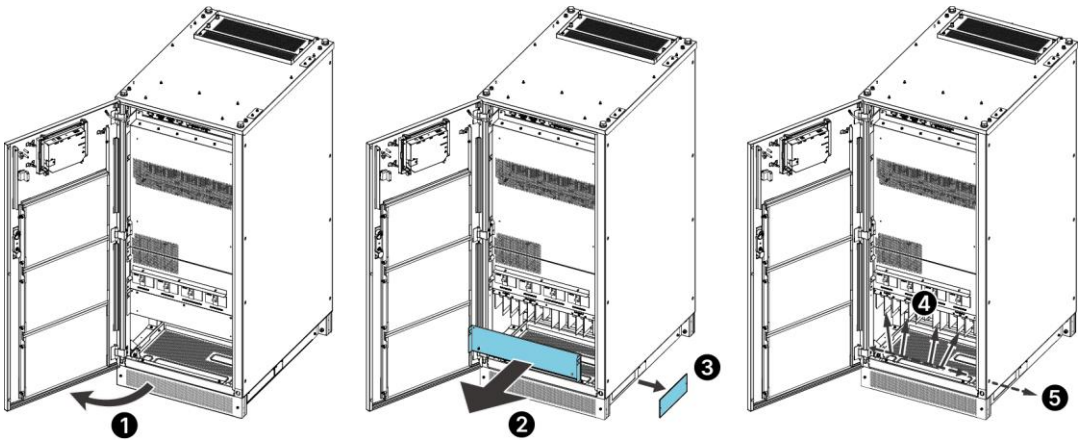

Figure 5-26: 60/ 80kVA UPS_ Bottom Cable Entry for the Wiring Terminals

100/ 120kVA

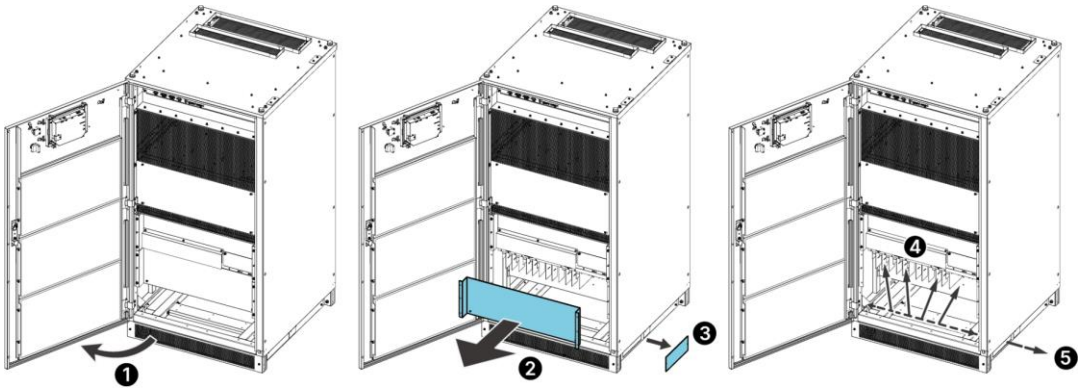

Figure 5-27: 100/ 120kVA UPS_ Bottom Cable Entry for the Wiring Terminals

160/ 200kVA

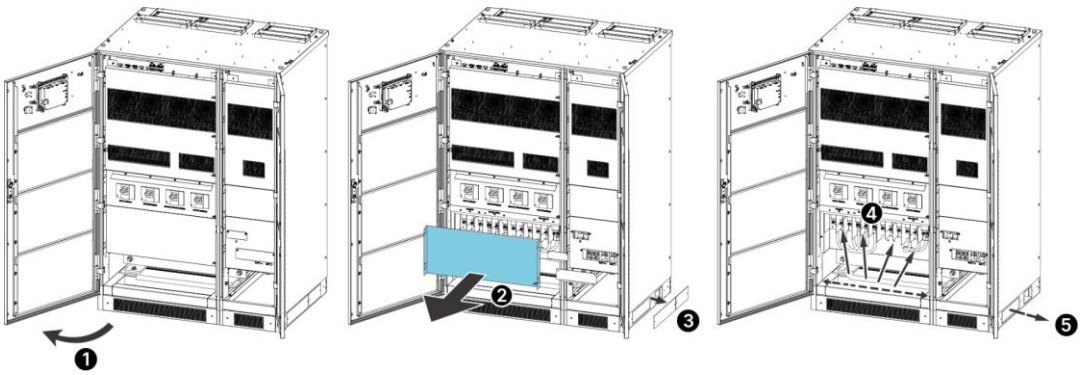

Figure 5-28: 160/ 200kVA UPS_ Bottom Cable Entry for the Wiring Terminals

Step 6

Follow *Table 5-2* to select proper terminal type, screw size and cable size to connect cables to the wiring terminals.

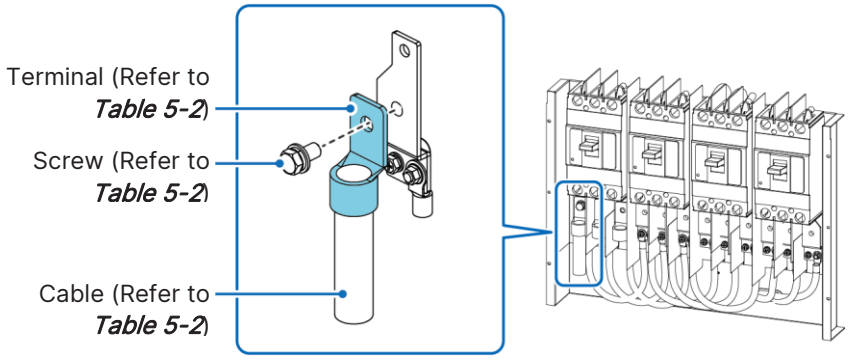

Figure 5-29: How to Connect Cables to the Wiring Terminals

Step 7

Connect the cables of the main AC source, output and external battery cabinet(s) to the UPS. Please refer to *Table 5-3*, *5.6 External Battery Cabinet Connection Warnings* and the following diagrams to perform wiring.

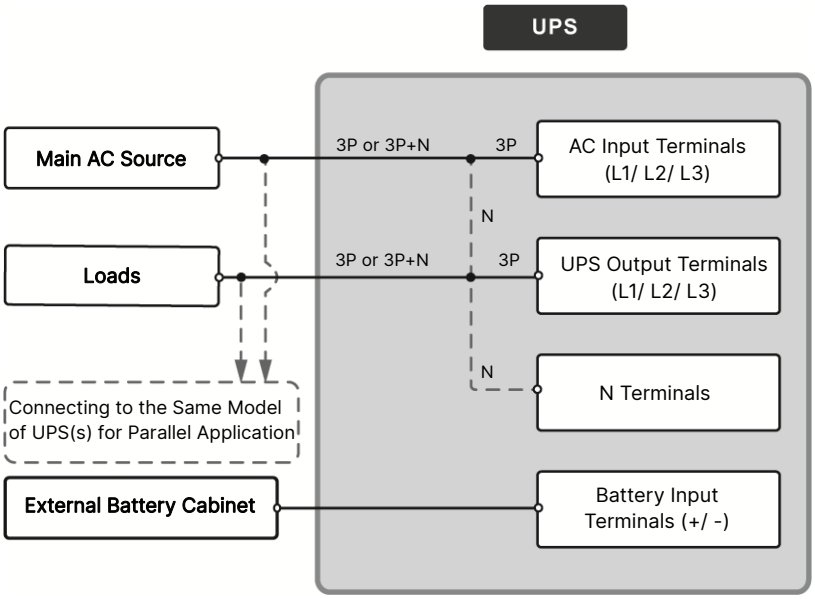

Figure 5-30: Single Unit Single Input Wiring Diagram

Step 8

Follow the table below to select proper Protective Earth (PE) copper cables to ground the UPS, external battery cabinet(s) and connected critical loads. The table is in accordance with *IEC 62477-1 Table 7*. The grounding diagram below is for reference.

UPS Capacity		20kVA/ 18kW	30kVA/ 27kW	40kVA/ 36kW 50kVA/ 45kW	60KVA/ 54Kw	80KVA/ 72kW	100kVA/ 90kW 120kVA/ 108kW	160kVA/ 144kW 200kVA/ 180kW
Suggested PE Copper Cable Size	Input	6 mm^2 × 1 PC (11.8 kcmil × 1 PC)	10 mm^2 × 1 PC (19.7 kcmil × 1 PC)	16 mm^2 × 1 PC (31.6 kcmil × 1 PC)	25 mm^2 × 1 PC (49.3 kcmil × 1 PC)	35 mm^2 × 1 PC (69.1 kcmil × 1 PC)	70 mm^2 × 1 PC (138.1 kcmil × 1 PC)	150 mm^2 × 1 PC (296 kcmil × 1 PC)
	Bypass	6 mm^2 × 1 PC (11.8 kcmil × 1 PC)	10 mm^2 × 1 PC (19.7 kcmil × 1 PC)	16 mm^2 × 1 PC (31.6 kcmil × 1 PC)	16 mm^2 × 1 PC (31.6 kcmil × 1 PC)	25 mm^2 × 1 PC (49.3 kcmil × 1 PC)	50 mm^2 × 1 PC (98.7 kcmil × 1 PC)	120 mm^2 × 1 PC (236.8 kcmil × 1 PC)
	Output	6 mm^2 × 1 PC (11.8 kcmil × 1 PC)	10 mm^2 × 1 PC (19.7 kcmil × 1 PC)	16 mm^2 × 1 PC (31.6 kcmil × 1 PC)	16 mm^2 × 1 PC (31.6 kcmil × 1 PC)	25 mm^2 × 1 PC (49.3 kcmil × 1 PC)	50 mm^2 × 1 PC (98.7 kcmil × 1 PC)	120 mm^2 × 1 PC (236.8 kcmil × 1 PC)
	Battery	10 mm^2 × 1 PC (19.7 kcmil × 1 PC)	16 mm^2 × 1 PC (31.6 kcmil × 1 PC)	25 mm^2 × 1 PC (49.3 kcmil × 1 PC)	35 mm^2 × 1 PC (69.1 kcmil × 1 PC)	50 mm^2 × 1 PC (98.7 kcmil × 1 PC)	95 mm^2 × 1 PC (187.5 kcmil × 1 PC)	60 mm^2 × 1 PC (187.5 kcmil × 1 PC)
Maximum Cable Lug Width		24 mm (0.94")						
Screw Size/ Cable Lug Inner Diameter		M8/ 8.4 mm (0.33")						
Tightening Torque		M8 = 150 ± 5 kgf-cm (130 ± 4.3 lb-in)						
Terminal Type*[1]		RNB14-8	RNB22-8	SQNBS22 -8	SQNBS38 -8	SQNBS60 -8	SQNBS100 -8	SQNBS150 -8

NOTE:

*[1] The suggested manufacturer is K.S. TERMINAL INC. You may use equivalent terminals provided by other manufacturers.

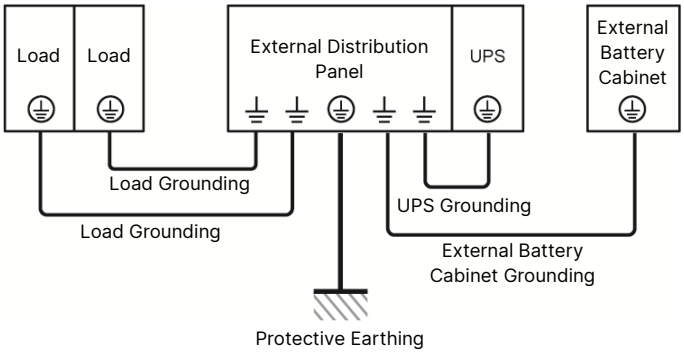

Figure 5-31: Grounding Diagram_ Single Unit

5.5.3.2 Dual Input (Single Unit)

When there are two AC power sources, single unit wiring procedures are as follows.

Step 1

Follow *5.5.2 Single Input and Dual Input Modification* to modify the UPS from single input into dual input.

Step 2

Follow Step 1 ~ Step 6 mentioned in *5.5.3.1 Single Input (Single Unit)*.

Step 3

Connect the cables of the main AC source, bypass source, output and external battery cabinet(s) to the UPS. Please refer to *Table 5-3*, *5.6 External Battery Cabinet Connection Warnings* and the following diagrams to perform wiring.

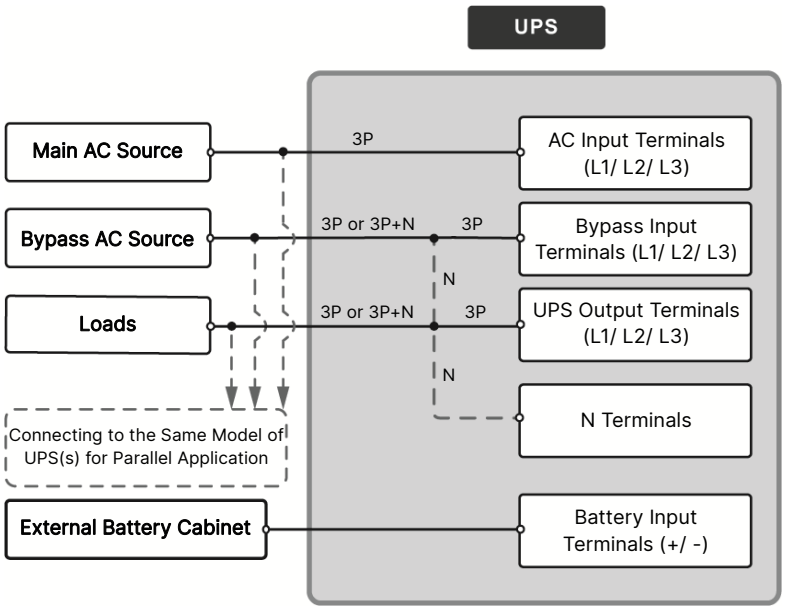

Figure 5-32: Single Unit Dual Input Wiring Diagram

Step 4

Follow Step 8 mentioned in *5.5.3.1 Single Input (Single Unit)* and refer to *Figure 5-34* to ground the UPS, external battery cabinet(s) and connected critical loads.

5.5.4 Parallel Units Wiring

NOTE:

1. You can parallel a maximum of eight UPS units for redundancy and capacity expansion.
2. Only UPSs with the same capacity, voltage, frequency and version can be paralleled. Please only use the provided parallel cable to parallel UPS units. Otherwise, the parallel function will fail.
3. When the UPSs are paralleled, the length of each unit's bypass input cables and output cables must be the same. This ensures that the parallel UPSs can equally share the critical loads in Bypass mode.

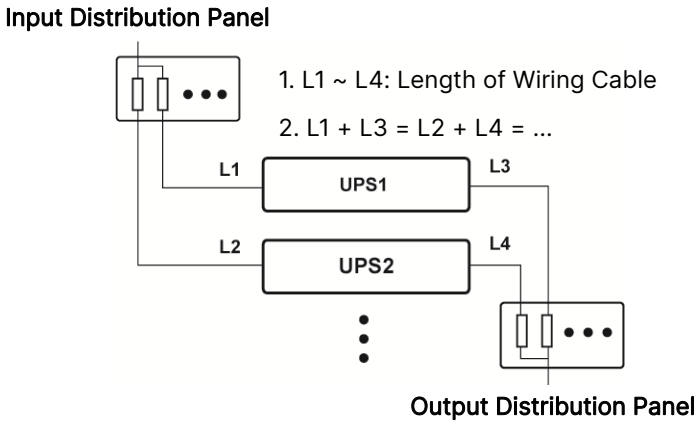

4 Before wiring, please read *5.5 Wiring* thoroughly and make sure that relevant conditions have been met.

Step 1

For single input, follow Step 1 ~ Step 8 mentioned in *5.5.3.1 Single Input (Single Unit)*. As for the grounding diagram, please refer to *Figure 5-34* rather than *Figure 5-31*.

For dual input, follow Step 1 ~ Step 4 mentioned in *5.5.3.2 Dual Input (Single Unit)*. As for the grounding diagram, please refer to *Figure 5-34* rather than *Figure 5-31.*

Step 2

Use the provided parallel cables*[1] to connect to the parallel ports of the parallel units. Please adopt the Daisy Chain method shown in the figure below. For the parallel port location, refer to *Figure 4-2*. Only bottom cable entry is allowed; please refer to *4.3 Cable Routing for the Communication Interfaces*.

NOTE:

*[1] One parallel cable is provided in each UPS's accessory package.

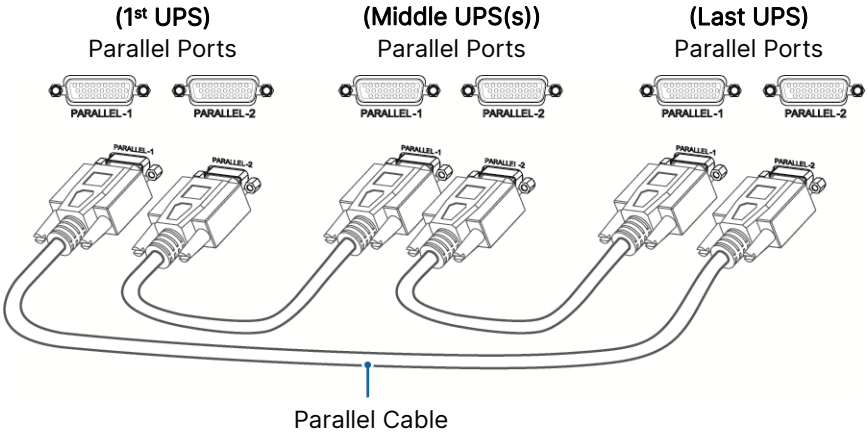

Figure 5-33: Parallel Port Connection_ Daisy Chain Method

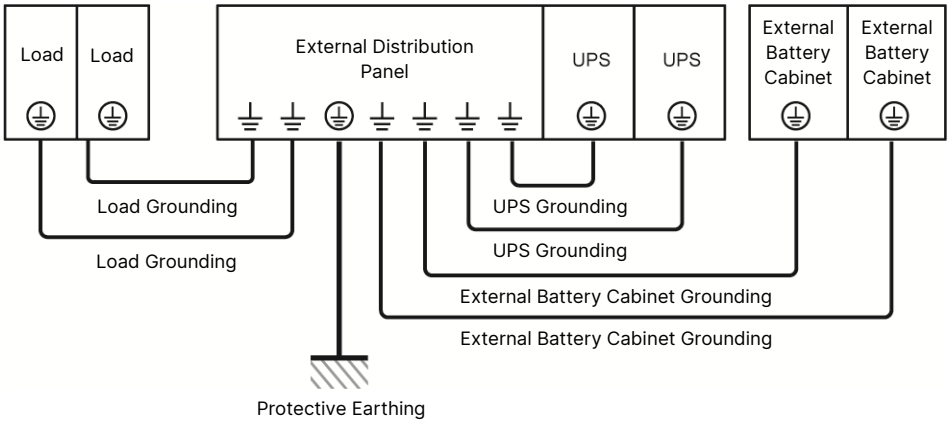

Figure 5-34: Grounding Diagram_ Parallel Units

WARNING:

1. Before start-up of the parallel units, qualified service personnel must set each UPS's '**Parallel Group ID**' (1 or 2) and '**Parallel ID**' (1 ~ 8) through the LCD. Otherwise, the parallel UPSs cannot be started. Please refer to *7.6.5 Parallel Setting*.
2. If you request an alarm to be triggered once the parallel cable connected to the UPS is lost, please contact service personnel for installation and setup.

5.6 External Battery Cabinet Connection Warnings

NOTE:

1. The information of the battery parameters in this chapter may not be applicable to the lithium-ion batteries. For relevant information, please refer to the manual of the lithium-ion batteries.
2. Whether you use lead-acid batteries or lithium-ion batteries, please contact Delta service personnel for any battery/ battery cabinet's setup and configurations.

WARNING:

1. Before performing battery/ battery cabinet installation, wiring and replacement, please turn off each external battery cabinet's breaker (Q5) to completely disconnect the battery power from the UPS.
2. A battery can present a risk of electric shock and high short-circuit current. Servicing batteries and battery cabinets must be performed or supervised by qualified service personnel knowledgeable in batteries, battery cabinets and the required precautions. Keep unauthorized personnel away from batteries and battery cabinets.

You should connect the UPS to at least one external battery cabinet to ensure that the connected critical loads are protected when a power failure occurs. You can connect the UPS to up to ten units of external battery cabinets

- To ensure that the batteries are fully charged, please charge the batteries for at least 8 hours before the initial use of UPS. The charging procedures are as follows.
  1. (A) Connect the UPS to the external battery cabinet(s), and (B) connect the main AC source and bypass AC source (for dual input application only) to the UPS. Please refer to *5.5 Wiring*.
  2. Follow *6. Operation* to turn on the UPS and the external battery cabinet(s). After that, the batteries will be charged automatically.

     WARNING:

     You can connect the critical loads to UPS only after the batteries are fully charged. This guarantees that the UPS can provide sufficient backup power to the critical loads connected when a power failure occurs.

- To connect the external battery cabinet(s) to the UPS, please refer to *5.5 Wiring* and *Figure 5-35.*
- For the external battery cabinet's grounding information, please refer to *Figure 5-31* and *Figure 5-34*.

- **Battery Parameters:**

No.	Item		20kVA/ 18kW	30kVA/ 27kW	40kVA/ 36kW	50kVA/ 45kW	60kVA/ 54kW
1	Charge Voltage		Float voltage: 544 Vdc (default)				
			Boost voltage: 560 Vdc (default)				
2	Charge Current	Maximum	11 A	13 A	15 A	17 A	23 A
		Default	8 A	9 A	10 A	11 A	15 A
3	Low Battery Shutdown Voltage		378 ~ 462 Vdc (default: 420 Vdc)				
4	Battery Quantity		12 V × 40 PCS (default)				

No.	Item		80kVA/ 72kW	100kVA/ 90kW	120kVA/ 108kW	160kVA/ 144kW	200kVA/ 180kW
1	Charge Voltage		Float voltage: 544 Vdc (default)				
			Boost voltage: 560 Vdc (default)				
2	Charge Current	Maximum	30 A	38 A	45 A	60 A	75 A
		Default	20 A	25 A	30 A	40 A	50 A
3	Low Battery Shutdown Voltage		378 ~ 462 Vdc (default: 420 Vdc)				
4	Battery Quantity		12 V × 40 PCS (default)				

NOTE:

1. If you need to modify the charge current default setting and low battery shutdown default setting, please contact your local dealer or service personnel.
2. Follow on-site requirements to choose 12 V × 36 ~ 44 PCS of batteries. Changing the battery quantity will influence specifications to be applied. For battery selection, installation and replacement, please contact your local dealer or customer service.
3. You must set up the '**Battery Rating Voltage**', '**Battery Strings**' and '**Capacity**' on the LCD according to on-site conditions; otherwise, batteries will be over-charged, not fully charged or even seriously damaged.

- Only use the same type of batteries from the same supplier. Never use old, new and different Ah batteries at the same time.
- The number of batteries must meet the UPS requirements.
- Do not connect the batteries in reverse.
- Use a multi-meter to measure whether the total voltage is around 12.5 Vdc × the total number of batteries after the batteries are connected in series.
- The default battery quantity is 40 PCS of 12 V batteries connected in series. You should use battery cables to connect the external battery cabinet(s) with the '+' and '-' terminals marked on the UPS.

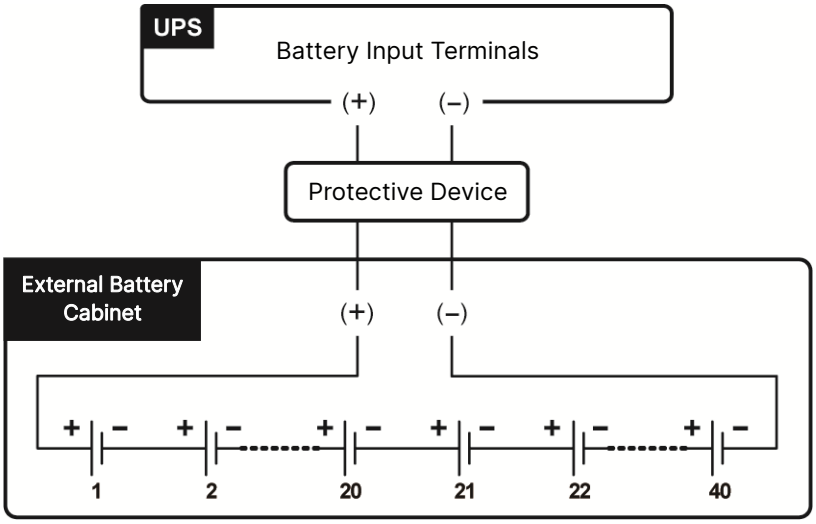

Figure 5-35: External Battery Cabinet Connection

WARNING:

The electrolyte leakage of the batteries can lead to serious accidents. For safety concerns, you must insulate the batteries properly (using insulated trays or boxes) from the metal cabinets and racks.

- **Installation of the External Battery Cabinet's Protective Device**

Please follow your UPS rating to install an appropriate protective device for each external battery cabinet. Please refer to *Table 5-4* and *Figure 5-36 ~ Figure 5-41*.

Table 5-4: External Battery Cabinet's Protective Device (Default Battery Q'ty: 12 Vdc × 40 PCS)

UPS Capacity	DC Circuit Breaker or DC Isolated Switch (Final Positive and Negative Poles' Voltage ≥ 600 Vdc)	DC Fuse (Voltage ≥ 600 Vdc)
20 kVA/ 18 kW	50 A	50 A × 2 PCS
30 kVA/ 27kW	75 A	75 A × 2 PCS
40 kVA/ 36 kW	100 A	100 A × 2 PCS
50 kVA/ 45 kW	125 A	125 A × 2 PCS
60 kVA/ 54 kW	160 A	160 A × 2 PCS
80 kVA/ 72 kW	200 A	200 A × 2 PCS
100 kVA/ 90 kW	250 A	250 A × 2 PCS
120 kVA/ 108 kW	300 A	300 A × 2 PCS
160 kVA/ 144 kW	400 A	400 A × 2 PCS
200 kVA/ 180 kW	500 A	500 A × 2 PCS

NOTE:

1. *Table 5-4* is for 12 Vdc × 40 PCS of batteries (default). If you install a different number of batteries, please contact Delta service personnel for the protective device's current and voltage values.
2. If you need to parallel multiple units of external battery cabinets, please contact Delta service personnel for relevant information.
3. To extend the backup time, you can parallel up to ten units of external battery cabinets to the UPS. Please note that (1) the number of batteries in each paralleled external battery cabinet shall be the same and (2) the cable length of each battery string shall be the same.

- When choosing the external battery cabinet's protective device, please take the following factors into consideration: (1) overcurrent between the UPS and battery circuit, (2) short circuit current of the batteries, (3) wire/ cable materials, and (4) local electrical regulations. If you have any questions about the external battery cabinet's protective device, please contact Delta service personnel.

- The protective device is optional, and its type must be fast-acting DC circuit breaker and/ or fast-acting DC fuse. If you want to buy any of them, please contact Delta service personnel. When choosing the protective device, follow the instructions below.

  (1) The protective device's rated current must comply with the current values shown in *Table 5-4*.

  (2) The specifications of the protective device's short-circuit protection (i.e. the tripping current of the fast-acting DC circuit breaker and/ or the melting current of the fast-acting DC fuse) must be 4 ~ 6 times the values shown in *Table 5-4*. Besides, the response time of the protective device must be less than 20 ms.

  (3) For the choice of the fast-acting DC fuse mentioned above, the A50QS series from the supplier *Ferraz Shawmut* is suggested. Please contact Delta customer service for relevant information.

  (4) The maximum tripping current of the fast-acting DC circuit breaker and/ or the maximum melting current of the fast-acting DC fuse mentioned above are 6 times as much as the values shown in *Table 5-4*. These maximum values are suggested for general applications only. For the actual maximum values, the maximum short-circuit capacity of the on-site batteries must be taken into consideration. Please contact Delta customer service for relevant information.

  (5) The maximum allowable fault current is 20 kA. Please confirm that the interrupting rating of your chosen protective device is sufficient.

External Battery Cabinet's Protective Device (Option 1)

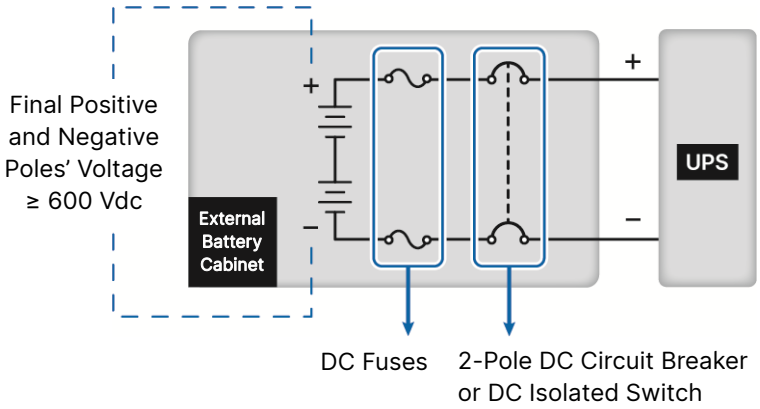

Figure 5-36: Installation of a 2-pole DC Circuit Breaker or DC Isolated Switch Connected in Series with Two DC Fuses

External Battery Cabinet's Protective Device (Option 2)

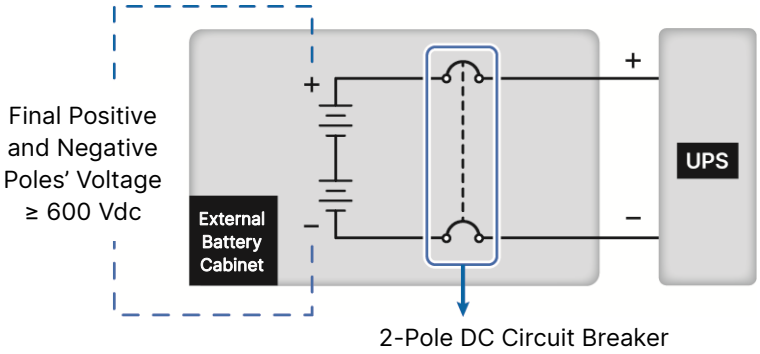

Figure 5-37: Installation of a 2-pole DC Circuit Breaker

External Battery Cabinet's Protective Device (Option 3)

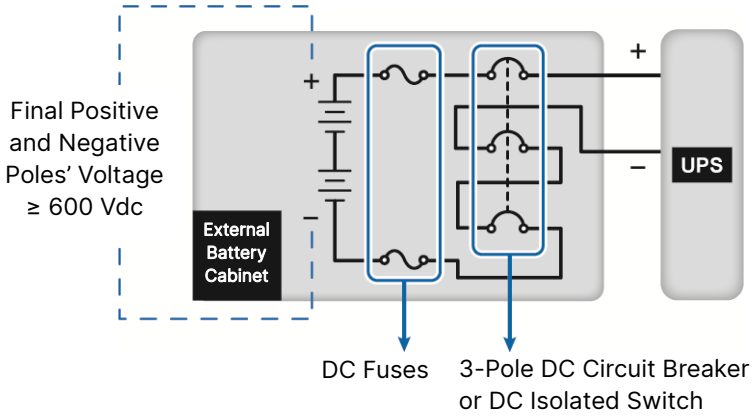

Figure 5-38: Installation of a 3-pole DC Circuit Breaker or DC Isolated Switch Connected in Series with Two DC Fuses

External Battery Cabinet's Protective Device (Option 4)

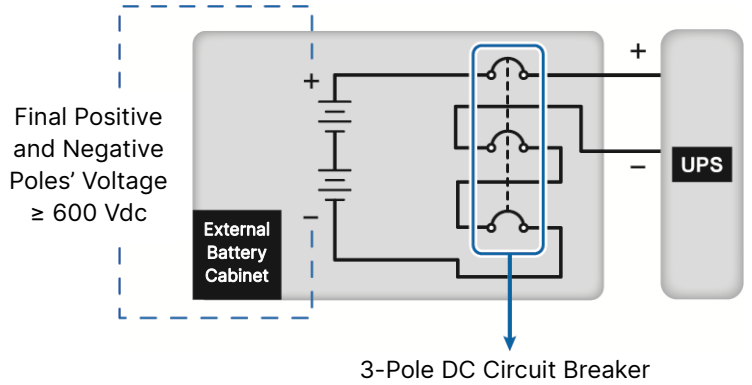

Figure 5-39: Installation of a 3-pole DC Circuit Breaker

External Battery Cabinet's Protective Device (Option 5)

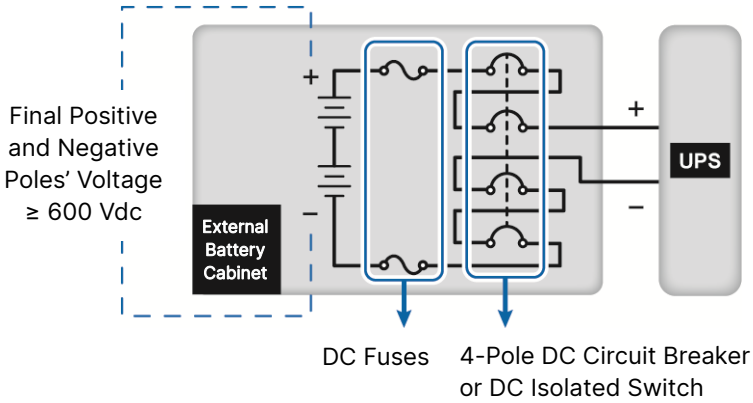

Figure 5-40: Installation of a 4-pole DC Circuit Breaker or DC Isolated Switch Connected in Series with Two DC Fuses

External Battery Cabinet's Protective Device (Option 6)

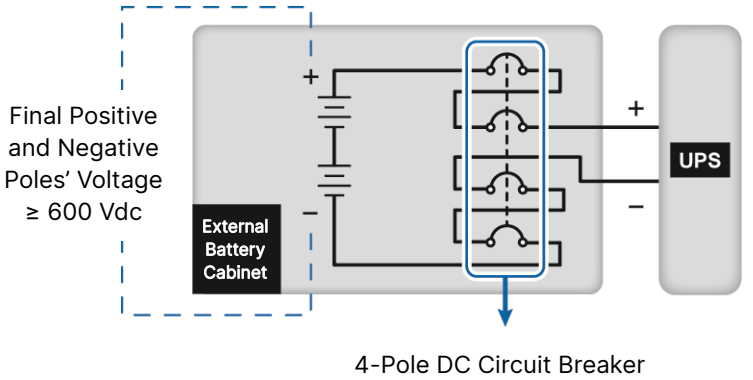

Figure 5-41: Installation of a 4-pole DC Circuit Breaker

- **Common Battery (Only for Parallel UPSs Sharing the Same External Battery Cabinet(s))**

To save on your cost and installation space, the parallel UPSs can share the connected external battery cabinet(s). See *Figure 5-42* for two parallel UPSs sharing one external battery cabinet as an example.

NOTE:

The following 'common battery' information is not applicable to the UPS using lithium-ion batteries. For relevant information, please refer to the user manual of the lithium-ion batteries. Whether you use the lead-acid batteries or the lithium-ion batteries, please contact Delta service personnel for any battery/ battery cabinet's setup and configurations.

For common battery application, please install a protective device between each parallel UPS and its connected external battery cabinet(s). You have to use the LCD to set each UPS's '**Float Charge Voltage**' (default: 544 V) the same, '**Equalized Charge Voltage**' (default: 560 V) the same, '**Battery Strings**' even and '**Charge Current (Max)**' even. Please refer to the examples below and *7. LCD Display & Settings*.

Example I

When (1) two UPSs are paralleled and share one external battery cabinet, (2) lead-acid batteries are used, (3) the battery capacity is 200 AH, (4) there are a total of 4 battery strings, and (5) the charge current is 80 A, please use the LCD to set each UPS's '**Battery Type**' as '**VRLA**', '**Capacity**' as 200 AH, '**Battery Strings**' as 2, and '**Charge Current (Max)**' as 40 A.

Example II

When (1) three UPSs are paralleled and share one external battery cabinet, (2) lead-acid batteries are used, (3) the battery capacity is 300 AH, (4) there are a total of 3 battery strings, and (5) the charge current is 90 A, please use the LCD to set each UPS's '**Battery Type**' as '**VRLA**', '**Capacity**' as 300 AH, '**Battery Strings**' as 1, and '**Charge Current (Max)**' as 30 A.

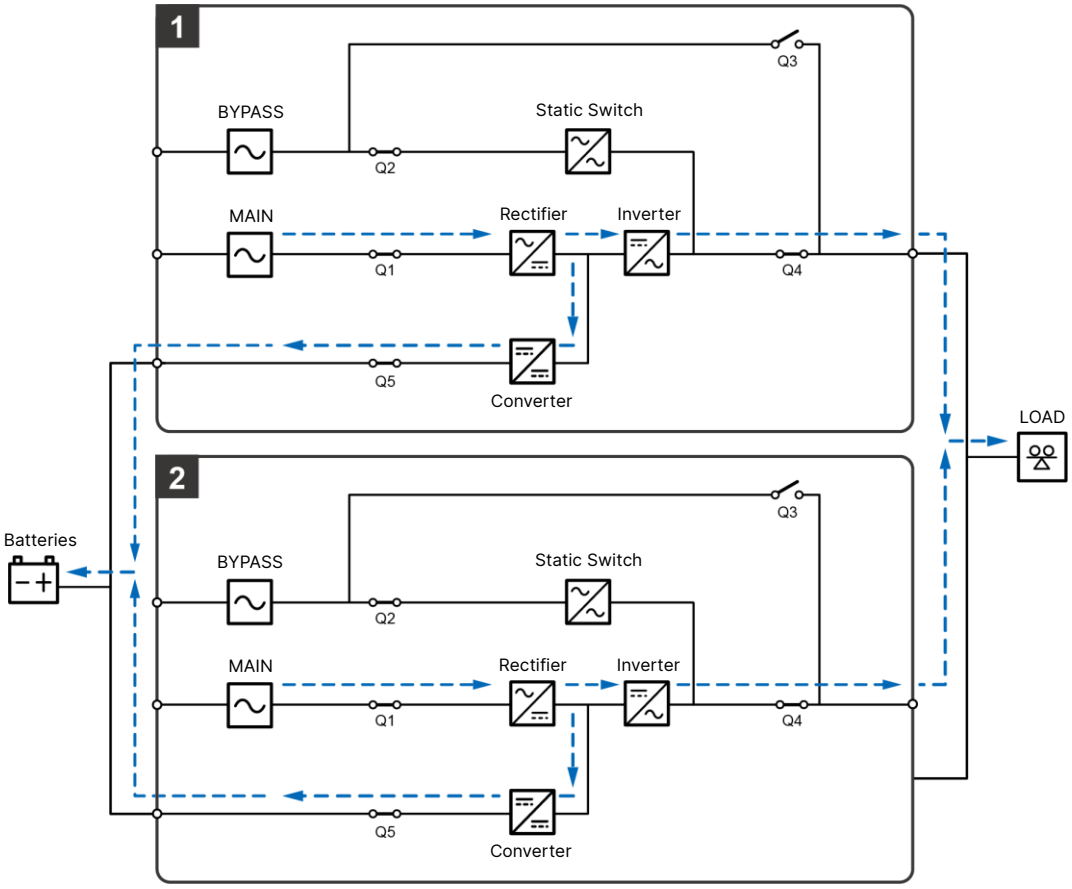

Figure 5-42: Common Battery Diagram

- External Battery Cabinet Alarm

When any external battery cabinet connected to the UPS has the following problems, the UPS system will sound an alarm. Please see the table below.

No.	External Battery Cabinet Status	Alarm
1	Battery Abnormal - Reversed	It sounds 0.5 seconds every second.
2	Battery Ground Fault	It sounds 0.5 seconds every second.
3	Battery Over Temperature	It sounds 0.5 seconds every second.
4	Battery Under Temperature	It sounds 0.5 seconds every second.
5	Battery Breaker Off	It sounds 0.5 seconds every 3 seconds.
6	Battery Disconnected (Missing)	It sounds 0.5 seconds every second.

No.	External Battery Cabinet Status	Alarm
7	Battery Over Charged	Long beep.
8	Battery Test Fail	It sounds 0.5 seconds every second.
9	Battery End of Discharge Imminent	It sounds 0.5 seconds every second.
10	Battery End of Discharge	Long beep.
11	Battery Life Time Expired	It sounds 0.5 seconds every 3 seconds.

5.7 Installation of Rodent Shields

To prevent possible damage from rodents, please install the rodent shields (provided) at the bottom of the UPS.

- **For 20/ 30/ 40/ 50/ 60/ 80/ 100/ 120kVA UPS, please follow the tables and steps below to install the rodent shields.**

Table 5-5: 20/ 30/ 40/ 50kVA UPS_ Quantity of Rodent Shield and M5 Screw

Rodent Shield Type	Front	Lateral	Rear
Rodent Shield Quantity	1 PC	2 PCS	1 PC
M5 Screw Quantity	2 PCS	8 PCS	2 PCS

Table 5-6: 60/ 80kVA UPS_ Quantity of Rodent Shield and M5 Screw

Rodent Shield Type	Front	Lateral	Rear
Rodent Shield Quantity	1 PC	2 PCS	1 PC
M5 Screw Quantity	2 PCS	8 PCS	2 PCS

Table 5-7: 100/ 120kVA UPS_ Quantity of Rodent Shield and M5 Screw

Rodent Shield Type	Front	Lateral	Rear
Rodent Shield Quantity	1 PC	2 PCS	1 PC
M5 Screw Quantity	2 PCS	8 PCS	2 PCS

NOTE:

The rodent shield installation methods for 20/ 30/ 40/ 50 kVA UPS, 60/ 80 kVA UPS and 100/ 120 kVA UPS are the same. Below, the illustration of 20/ 30/ 40/ 50 kVA UPS will be used as an example.

Step 1

Install the front rodent shield at the front bottom of the UPS.

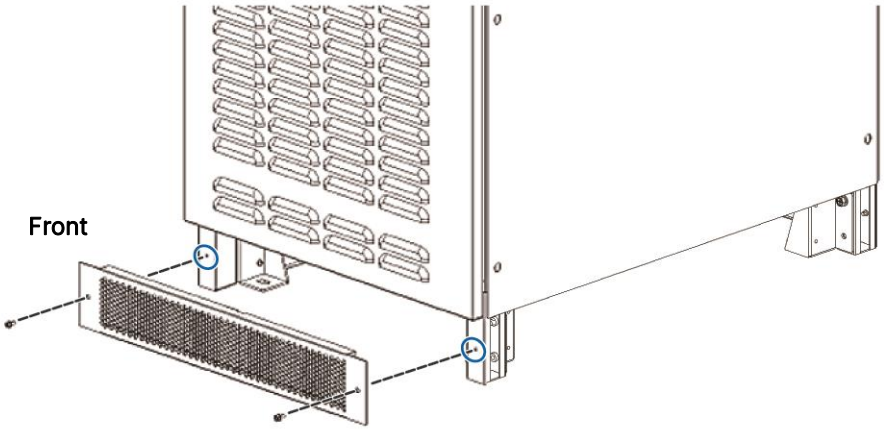

Figure 5-43: 20/ 30/ 40/ 50kVA UPS _ Install the Front Rodent Shield at the Front Bottom

Step 2

Install the lateral rodent shields at the bottom of two sides.

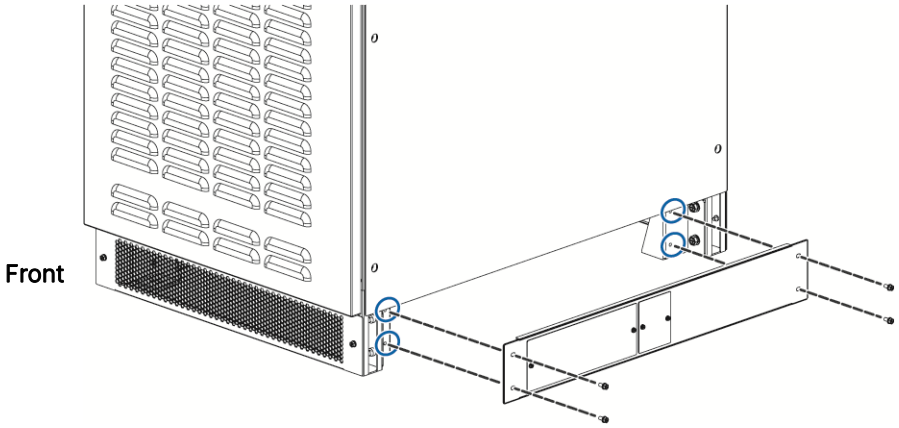

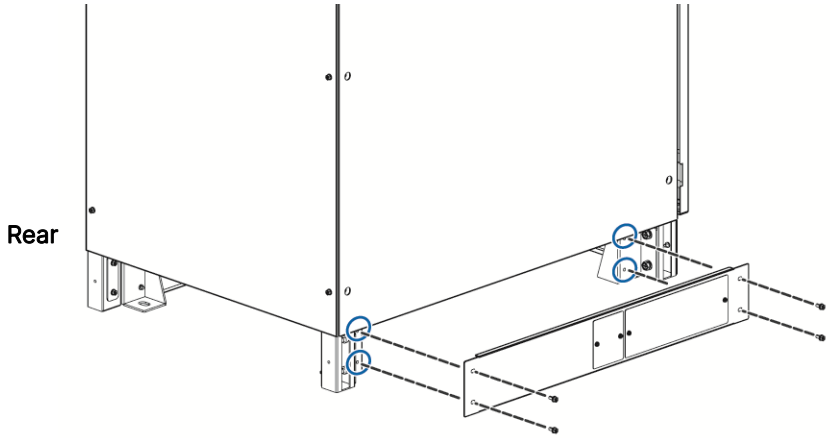

Figure 5-44: 20/ 30/ 40/ 50kVA UPS _ Install the Lateral Rodent Shields at the Bottom of Two Sides

Step 3

Install the rear rodent shield at the rear bottom of the UPS.

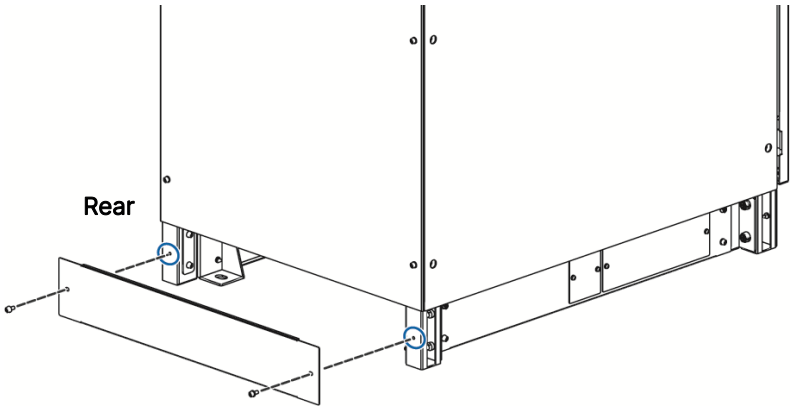

Figure 5-45: 20/ 30/ 40/ 50kVA UPS _ Install the Rear Rodent Shield at the Rear Bottom

- For 160/ 200kVA UPS, please follow the table and steps below to install the rodent shields.

Table 5-8: 160/ 200kVA UPS_ Quantity of Rodent Shield and M5 Screw

Rodent Shield Type	Front	Lateral	Rear
Rodent Shield Quantity	2 PCS	2 PCS	2 PCS
M5 Screw Quantity	4 PCS	4 PCS	4 PCS

Step 1

Install the front rodent shields at the front bottom of the UPS.

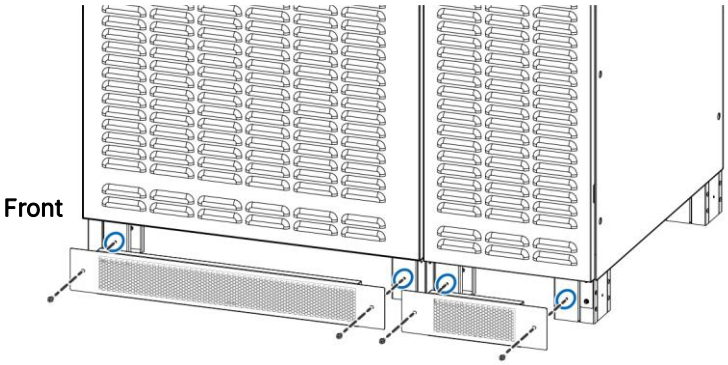

Figure 5-46: 160/ 200kVA UPS _ Install the Front Rodent Shields at the Front Bottom

Step 2

Install the lateral rodent shields at the bottom of two sides.

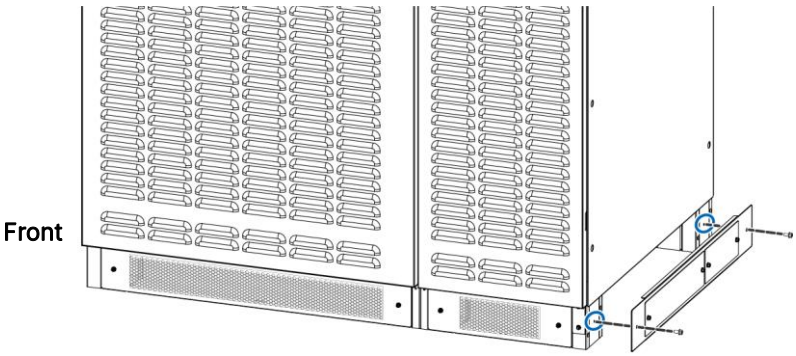

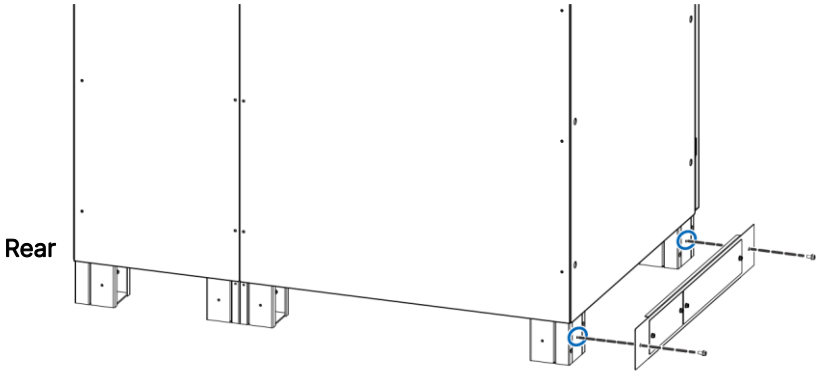

Figure 5-47: 160/ 200kVA UPS _ Install the Lateral Rodent Shields at the Bottom of Two Sides

Step 3

Install the rear rodent shields at the rear bottom of the UPS.

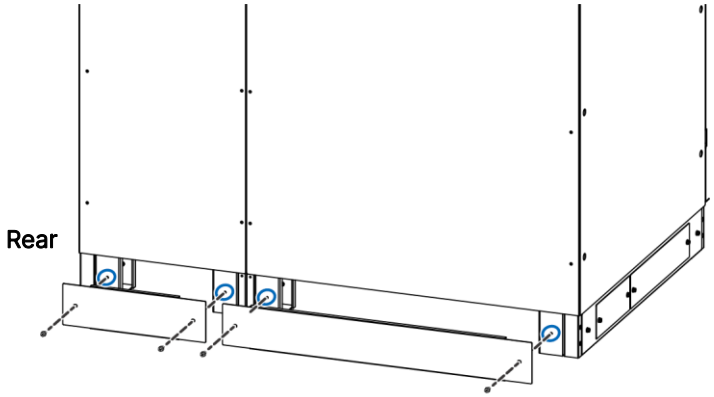

Figure 5-48: 160/ 200kVA UPS _ Install the Rear Rodent Shields at the Rear Bottom

Chapter 6 : Operation

6.1 Pre Start-up & Pre Turn-off Warnings

NOTE:

1. All LCD diagrams in the user manual are for reference only. The display is subject to the actual status of the UPS.
2. For information about the LCD touch panel and tri-color LED indicator, please refer to *2.8 Tri-color LED Indicator & Buzzer* and *7. LCD Display & Settings*.
3. If the **ON/ OFF Button** ( ) does not appear on the screen, please log in as **Administrator** first, and then go to SETUP → **General Setting** → **User** → **On/ Off Button Access** to change the setting.

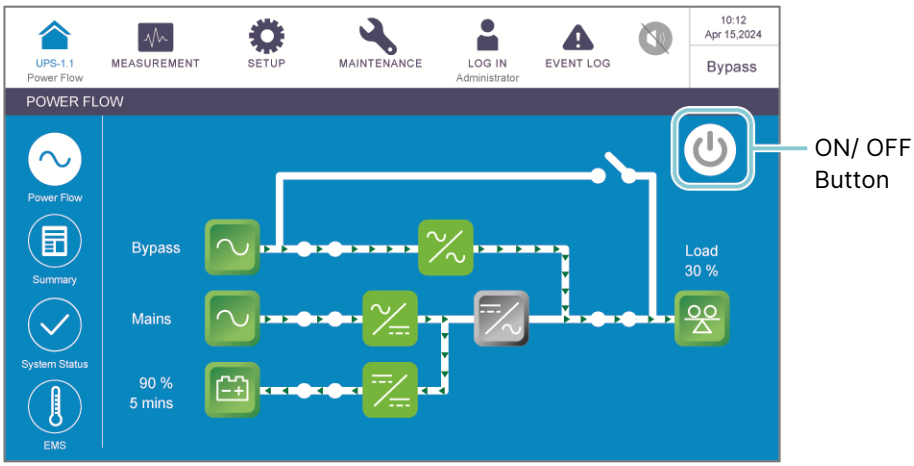

4. The external battery cabinet's breaker (Q5) shown on the LCD is always **ON** by default. To enable the detection of the Q5 status via the LCD, please contact Delta customer service for additional configurations.

- **Pre Start-up Warnings**

1. Before UPS operation, ensure that installation and wiring have been completed according to *5. Installation and Wiring*, and relevant precautions and instructions have been followed. Make sure that the AC power's voltage, frequency, phase sequence and battery type meet the UPS's requirements.
2. Make sure that all switches and breakers, including every external battery cabinet's breaker (Q5), are in the **OFF** position.

3. Make sure that the UPS's voltage difference between the Neutral (N) and PE (⏚) is below 3V.

- **Pre Turn-off Warnings**

  Before you perform the turn-off procedures, please make sure the critical loads connected to the UPS have already been safely shut down.

6.2 Start-up Procedures

6.2.1 On-Line Mode Start-up Procedures

WARNING:

Before turning on the UPS, please read ***6.1 Pre Start-up & Pre Turn-off Warnings*** thoroughly and ensure that the precautions and instructions have been followed.

<u>Step 1</u>

Ensure that the Manual Bypass Breaker (Q3) is in the **OFF** position.

<u>Step 2</u>

Switch **ON** every external battery cabinet's breaker (Q5).

<u>Step 3</u>

Switch **ON** the Input Breaker (Q1) and Bypass Breaker (Q2).

<u>Step 4</u>

Tap the **ON/ OFF Button** (⏻) on the LCD screen.

<u>Step 5</u>

Switch **ON** the Output Breaker (Q4).

<u>Step 6</u>

After the inverter turns on, the UPS will run in On-Line mode, the LCD screen will show as below and the tri-color LED indicator will illuminate green.

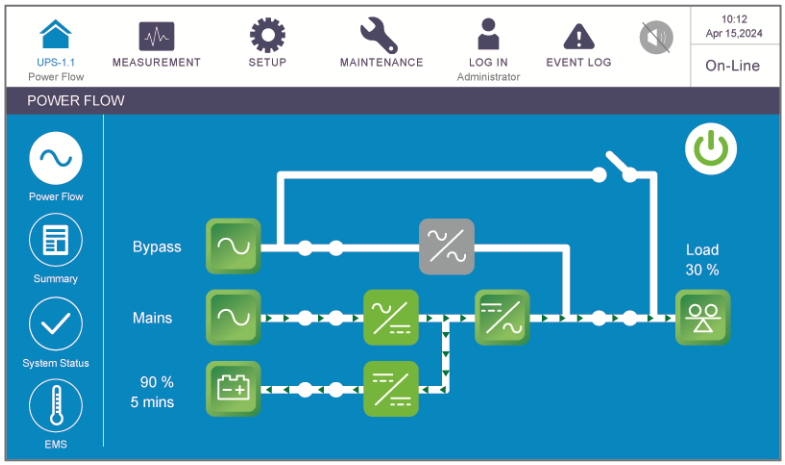

6.2.2 Battery Mode Start-up Procedures

WARNING:

Before turning on the UPS, please read *6.1 Pre Start-up & Pre Turn-off Warnings* thoroughly and ensure that the precautions and instructions have been followed.

Step 1

Ensure that the Manual Bypass Breaker (Q3) is in the **OFF** position.

Step 2

Switch **ON** every external battery cabinet's breaker (Q5).

Step 3

Press the **BATT. START** button on the **Communication Interfaces (I)** for one second.

Step 4

Tap the **ON/ OFF Button** ( ) on the LCD screen.

Step 5

Switch **ON** the Output Breaker (Q4).

Step 6

After the inverter turns on, the UPS will run in Battery mode, the LCD screen will show as below and the tri-color LED indicator will illuminate yellow.

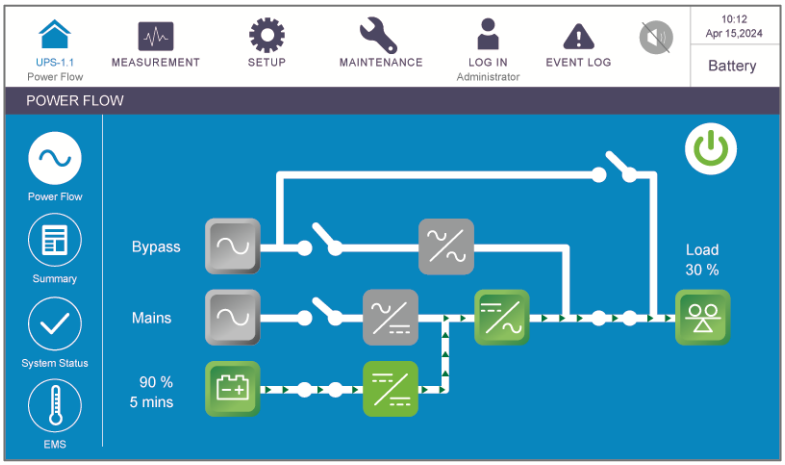

6.2.3 Bypass Mode Start-up Procedures

WARNING:

Before turning on the UPS, please read *6.1 Pre Start-up & Pre Turn-off Warnings* thoroughly and ensure that the precautions and instructions have been followed.

<u>Step 1</u>

Ensure that the Manual Bypass Breaker (Q3) is in the **OFF** position.

<u>Step 2</u>

Switch **ON** the Bypass Breaker (Q2) and Output Breaker (Q4).

<u>Step 3</u>

Now, the UPS runs in Bypass mode, the LCD screen shows as below and the tri-color LED indicator illuminates yellow.

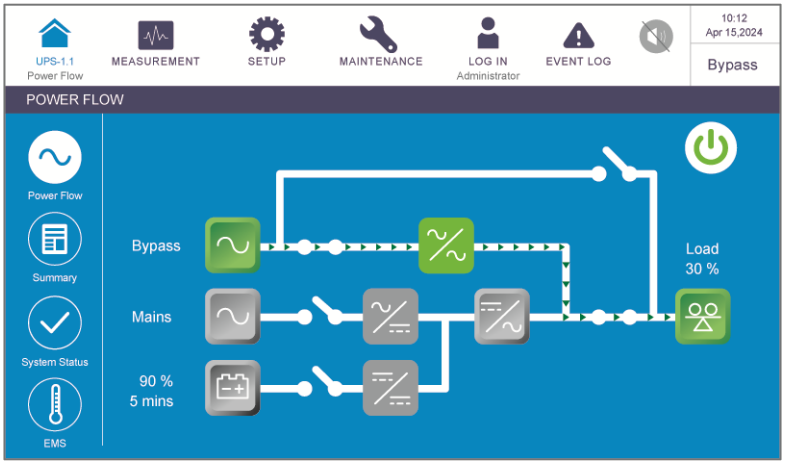

6.2.4 Manual Bypass Mode Start-up Procedures

WARNING:

1. Before turning on/ off the UPS, please read *6.1 Pre Start-up & Pre Turn-off Warnings* thoroughly and ensure that the precautions and instructions have been followed.
2. In Manual Bypass Mode, make sure that all the switches and breakers (except for the Manual Bypass Breaker (Q3)) are in the **OFF** position before working on the UPS's internal circuits to prevent electric shock. DO NOT touch any terminal and bus bar which may carry high-voltage electricity.

- **From On-Line Mode to Manual Bypass Mode**

<u>Step 1</u>

Tap the **ON/ OFF Button** ( ) on the LCD screen to shut down the inverter.

<u>Step 2</u>

Ensure that the UPS runs in Bypass mode. After confirmation, turn **ON** the Manual Bypass Breaker (Q3).

<u>Step 3</u>

Switch **OFF** the Output Breaker (Q4).

<u>Step 4</u>

Switch **OFF** the Input Breaker (Q1) and Bypass Breaker (Q2). After that, the LCD screen shows as follows.

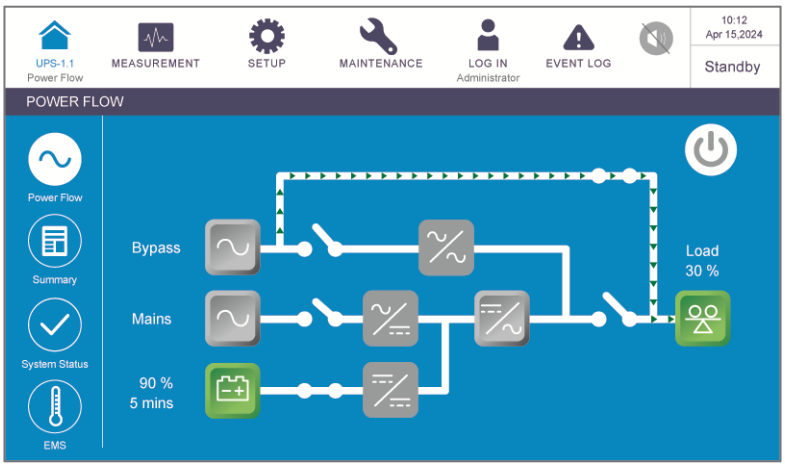

Step 5

Wait for the UPS to complete DC BUS discharging. After discharging, switch **OFF** every external battery cabinet's breaker (Q5). Then, the LCD and tri-color LED indicator will be off.

- **From Manual Bypass Mode to On-Line Mode**

Step 1

Switch **ON** every external battery cabinet's breaker (Q5).

Step 2

Switch **ON** the Input Breaker (Q1) and Bypass Breaker (Q2). After that, ensure that the bypass SCR is active.

Step 3

Switch **ON** the Output Breaker (Q4).

Step 4

After the UPS runs in Bypass mode, switch **OFF** the Manual Bypass Breaker (Q3).

Step 5

Tap the **ON/ OFF Button** ( ) on the LCD screen.

Step 6

After the inverter turns on, the UPS will run in On-Line mode, the LCD screen will show as below and the tri-color LED indicator will illuminate green.

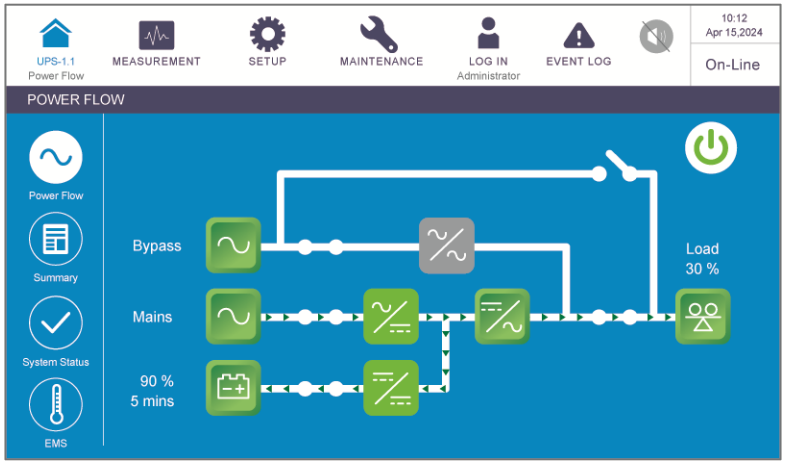

6.2.5 ECO Mode Start-up Procedures

WARNING:

Before turning on the UPS, please read *6.1 Pre Start-up & Pre Turn-off Warnings* thoroughly and ensure that the precautions and instructions have been followed.

Step 1

Ensure that the Manual Bypass Breaker (Q3) is in the **OFF** position.

Step 2

Switch **ON** every external battery cabinet's breaker (Q5).

Step 3

Switch **ON** the Bypass Breaker (Q2), wait for the LCD initial screen and switch **ON** the Input Breaker (Q1).

If the bypass input is within the normal range, the UPS will run in Bypass mode.

Step 4

Switch **ON** the Output Breaker (Q4).

Step 5

Log in as **Administrator**. For the **Administrator** password, please contact service personnel.

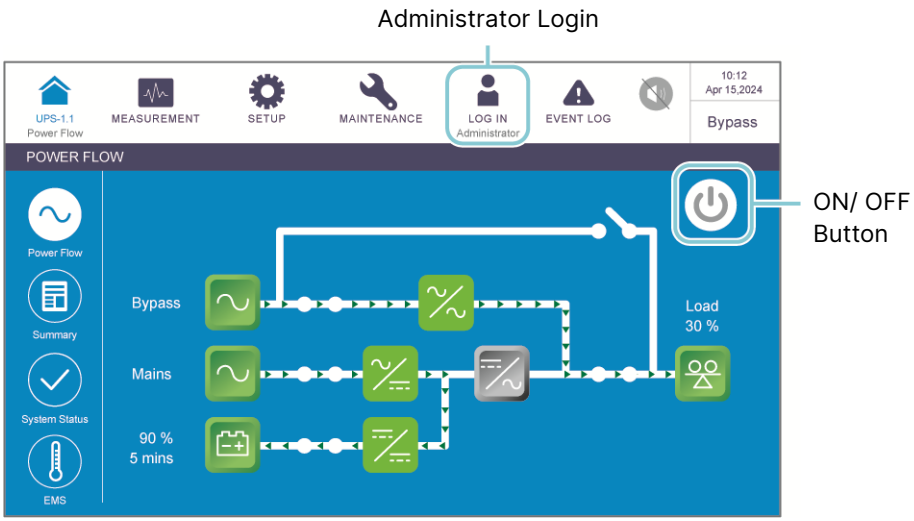

Step 6

Go to **SETUP** → **Mode Setting** → Select **ECO**.

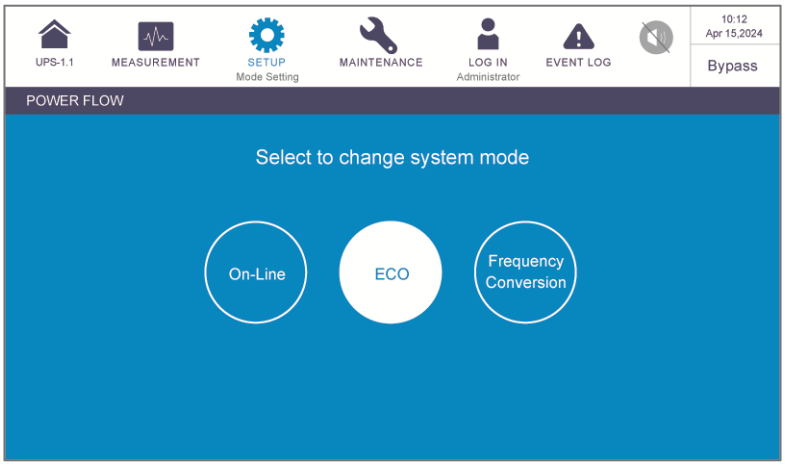

Step 7

Tap the icon (UPS-1.1) to go back to the **Main Screen** and tap the **ON/ OFF Button** ( ).

Step 8

After the inverter turns on and the system confirms that the bypass voltage is normal, the UPS will automatically transfer to ECO mode to let the bypass supply power, the LCD screen will show as below and the tri-color LED indicator will illuminate green.

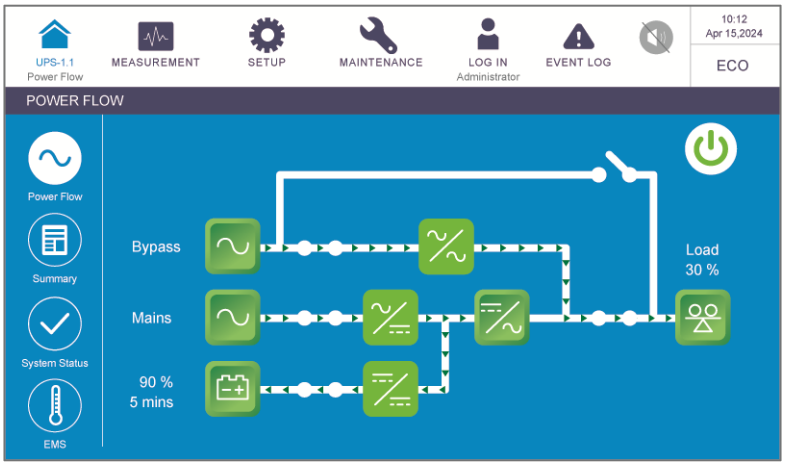

6.2.6 Frequency Conversion Start-up Procedures

WARNING:

1. Before turning on the UPS, please read ***6.1 Pre Start-up & Pre Turn-off Warnings*** thoroughly and ensure that the precautions and instructions have been followed.
2. Frequency Conversion mode is only applicable to a single UPS and not to parallel UPSs.
3. When the UPS runs in Frequency Conversion mode, once the inverter turns off, there is no bypass power supplied to the loads.

Step 1

Ensure that the Manual Bypass Breaker (Q3) is in the **OFF** position.

Step 2

Turn **OFF** the connected loads to prevent the wrong frequency from damaging the loads.

Step 3

Switch **ON** every external battery cabinet's breaker (Q5).

Step 4

Switch **ON** the Bypass Breaker (Q2), wait for the LCD initial screen and switch **ON** the Input Breaker (Q1).

If the bypass input is within the normal range, the UPS will run in Bypass mode.

Step 5

Log in as **Administrator**. For the **Administrator** password, please contact service personnel.

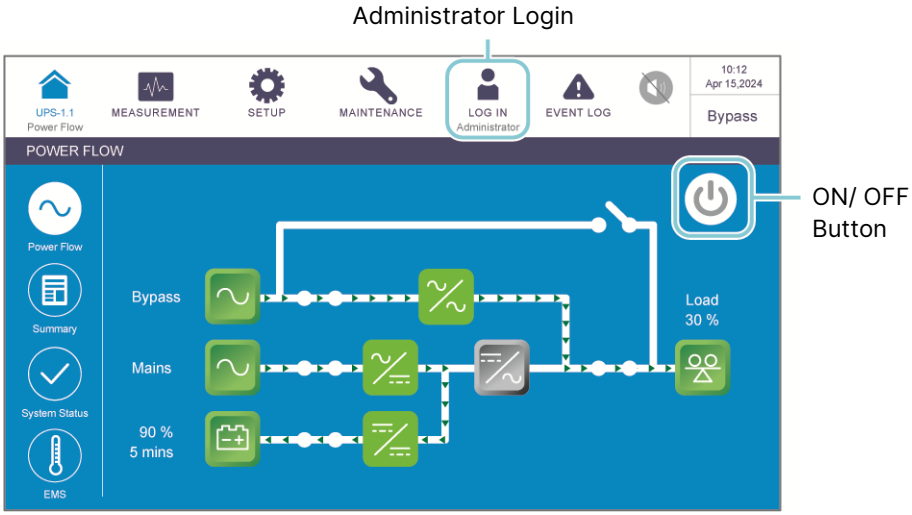

Step 6

Go to **SETUP** → **Mode Setting** → Select **Frequency Conversion**.

WARNING:

Once you select '**Frequency Conversion**', the UPS will run in Standby mode and the output will be terminated.

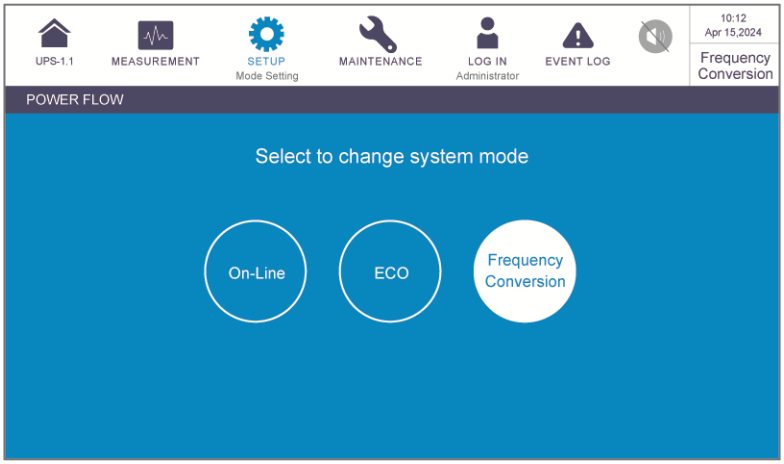

Step 7

Go to **SETUP** → **Input & Output Setting** → **Output** → Set up **Frequency**

Step 8

Switch **ON** the Output Breaker (Q4).

Step 9

Tap the icon (UPS-1.1) to go back to the **Main Screen** and tap the **ON/ OFF Button** ( ).

Step 10

After the inverter turns on, the UPS will run in Frequency Conversion mode, the output frequency will be the same as the setup value, the LCD screen will show as below and the tri-color LED indicator will illuminate green.

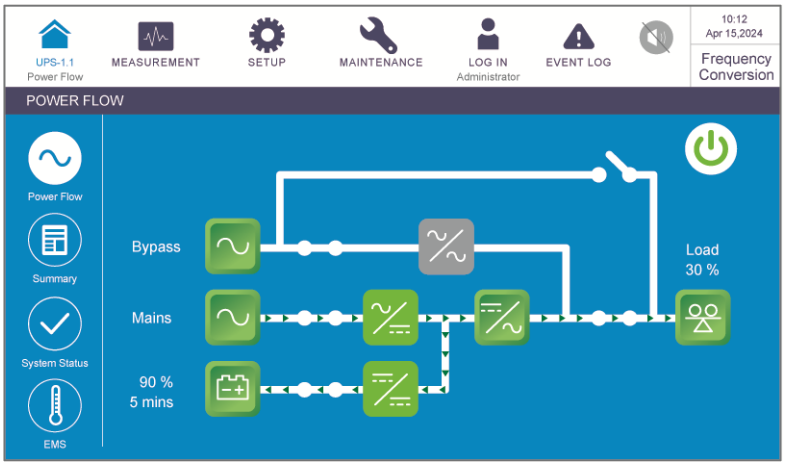

6.3 Turn-off Procedures

6.3.1 On-Line Mode Turn-off Procedures

WARNING:

Before turning off the UPS, please read *6.1 Pre Start-up & Pre Turn-off Warnings* thoroughly and ensure that the precautions and instructions have been followed.

<u>Step 1</u>

Tap the **ON/ OFF Button** ( ) to shut down the UPS's inverter. After that, the UPS will let the bypass AC source supply power. At the moment, if the bypass is abnormal, there is a risk of output interruption.

<u>Step 2</u>

Switch **OFF** the Input Breaker (Q1) and Bypass Breaker (Q2). After that, the UPS will transfer to Standby mode.

<u>Step 3</u>

Wait for the UPS to complete the DC BUS discharging and switch **OFF** each external battery cabinet's breaker (Q5). Now, the LCD screen and tri-color LED indicator will be off.

<u>Step 4</u>

Switch **OFF** the Output Breaker (Q4).

6.3.2 Battery Mode Turn-off Procedures

WARNING:

Before turning off the UPS, please read ***6.1 Pre Start-up & Pre Turn-off Warnings*** thoroughly and ensure that the precautions and instructions have been followed.

Step 1

Please make sure that the critical loads connected to the UPS have already been safely shut down. After confirmation, tap the **ON/ OFF Button** ( ) to shut down the UPS's inverter. Note that once you turn off the inverter, all the output power will be completely cut off and the UPS will transfer to Standby mode.

Step 2

Switch **OFF** the Input Breaker (Q1) and Bypass Breaker (Q2).

Step 3

Wait for the UPS to complete the DC BUS discharging and switch **OFF** each external battery cabinet's breaker (Q5). Now, the LCD and tri-color LED indicator will be off.

Step 4

Switch **OFF** the Output Breaker (Q4).

6.3.3 Bypass Mode Turn-off Procedures

WARNING:

Before turning off the UPS, please read ***6.1 Pre Start-up & Pre Turn-off Warnings*** thoroughly and ensure that the precautions and instructions have been followed.

Step 1

Switch **OFF** the Input Breaker (Q1) and Bypass Breaker (Q2). After that, the UPS will transfer to Standby mode.

Step 2

Wait for the UPS to complete the DC BUS discharging and switch **OFF** each external battery cabinet's breaker (Q5). Now, the LCD and tri-color LED indicator will be off.

Step 3

Switch **OFF** the Output Breaker (Q4).

6.3.4 Manual Bypass Mode Turn-off Procedures

WARNING:

1. Ensure that the LCD, all LED indicators and fans are **OFF**.
2. Check that all the switches, breakers and power are **OFF**.

In Manual Bypass mode, the LCD and tri-color LED indicator are both **OFF**. To completely shut down the UPS, switch **OFF** the Manual Bypass Breaker (Q3).

6.3.5 ECO Mode Turn-off Procedures

WARNING:

Before turning off the UPS, please read ***6.1 Pre Start-up & Pre Turn-off Warnings*** thoroughly and ensure that the precautions and instructions have been followed.

Step 1

Tap the **ON/ OFF Button** ( ) to shut down the UPS's inverter. After that, the UPS will let the bypass AC source supply power. At the moment, if the bypass is abnormal, there is a risk of output interruption.

Step 2

Switch **OFF** the Input Breaker (Q1) and Bypass Breaker (Q2). After that, the UPS will transfer to Standby mode.

Step 3

Wait for the UPS to complete the DC BUS discharging and switch **OFF** each external battery cabinet's breaker (Q5). Now, the LCD and tri-color LED indicator will be off.

Step 4

Switch **OFF** the Output Breaker (Q4).

6.3.6 Frequency Conversion Mode Turn-off Procedures

WARNING:

Before turning off the UPS, please read ***6.1 Pre Start-up & Pre Turn-off Warnings*** thoroughly and ensure that the precautions and instructions have been followed.

Step 1

Please make sure that the critical loads connected to the UPS have already been safely shut down. After confirmation, tap the **ON/ OFF Button** ( ) to shut down the UPS's inverter. Note that once you turn off the inverter, all the output power will be completely cut off and the UPS will transfer to Standby mode. Now, the power modules keep charging the batteries.

Step 2

Switch **OFF** the Input Breaker (Q1) and Bypass Breaker (Q2). After that, the UPS will transfer to Standby mode.

Step 3

Wait for the UPS to complete the DC BUS discharging and switch **OFF** each external battery cabinet's breaker (Q5). Now, the LCD and tri-color LED indicator will be off.

Step 4

Switch **OFF** the Output Breaker (Q4).

6.4 Start-up & Turn-off Procedures for Parallel Units

WARNING:

1. Before turning on the UPS, please read *6.1 Pre Start-up & Pre Turn-off Warnings* thoroughly and ensure that the precautions and instructions have been followed.
2. Ensure that every operation procedure is synchronized to all parallel UPSs. If you just want to operate a specific UPS but not all the parallel ones, please contact service personnel.

- **Start-up Procedures (Parallel Units)**

Step 1

Ensure that each parallel cable (provided) is connected well.

Step 2

Perform the first few steps following your chosen mode's section in *6.2 Start-up Procedures* until there is power supplied to the UPS (after switching **ON** Q1/ Q2 or pressing the **BATT. START** button)*[1].

NOTE:

*[1] For common battery configurations, you must switch **ON** each parallel UPS's Input Breaker (Q1), Bypass Breaker (Q2) or Input Breaker (Q1) and Bypass Breaker (Q2) or execute battery start-up to start up the UPS first. After that, you can follow *6.2 Start-up Procedures* according to your chosen mode to perform parallel units' start-up procedures.

At this moment, please perform the following parallel settings on the LCD.

a. Assign a different **Parallel ID No.** to each parallel UPS. For all the parallel UPSs, please set the same **Parallel Group ID No.** and the same parameters for the input, output and battery settings.

b. Tap the icon (UPS-1.1) to check if the **Parallel Group ID No.** and **Parallel ID No.** are set correctly. The UPS with the smallest **Parallel ID No.** is the master UPS.

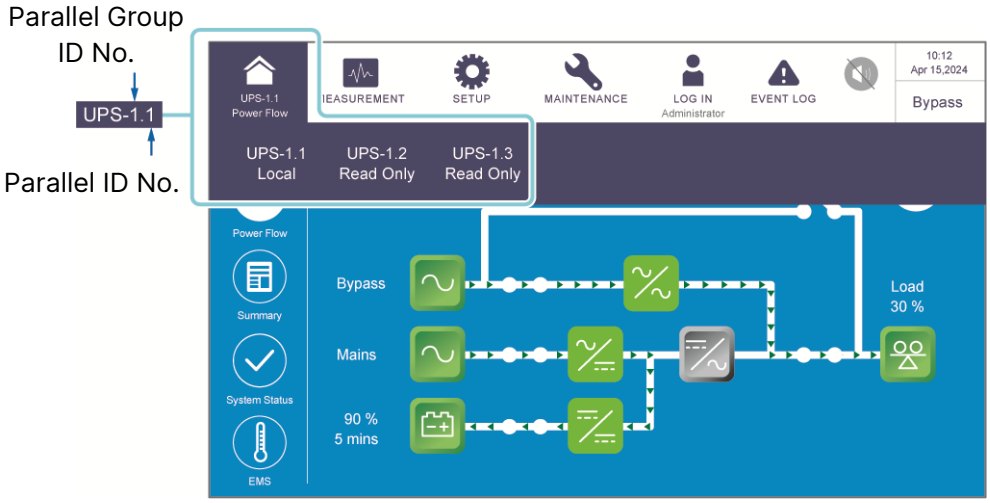

Step 3

Complete the rest of the steps in *6.2 Start-up Procedures* according to your chosen mode.

Step 4

Ensure that the output voltage difference between each parallel UPS is below 3V. Only authorized Delta engineers or service personnel can check the output voltage difference, or it must be done under the supervision of authorized Delta engineers or service personnel.

Step 5

Now, the UPSs are ready to operate in parallel.

- **Turn-off Procedures (Parallel Units)**

WARNING:

To turn off one of the parallel UPSs, please check whether the remaining parallel units' total capacity exceeds the total critical loads. Otherwise, all parallel units will shut down due to overload. Before doing this, please contact service personnel.

Perform the steps following your chosen mode's section in *6.3 Turn-off Procedures*. Make sure to synchronize each step to all the parallel UPSs.

Chapter 7 : LCD Display & Settings

7.1 LCD Display Hierarchy

Please refer to *Figure 7-1* for an overview of all the LCD items. For some of the items marked with an asterisk, they will show up only under certain conditions. Please refer to the note below for details.

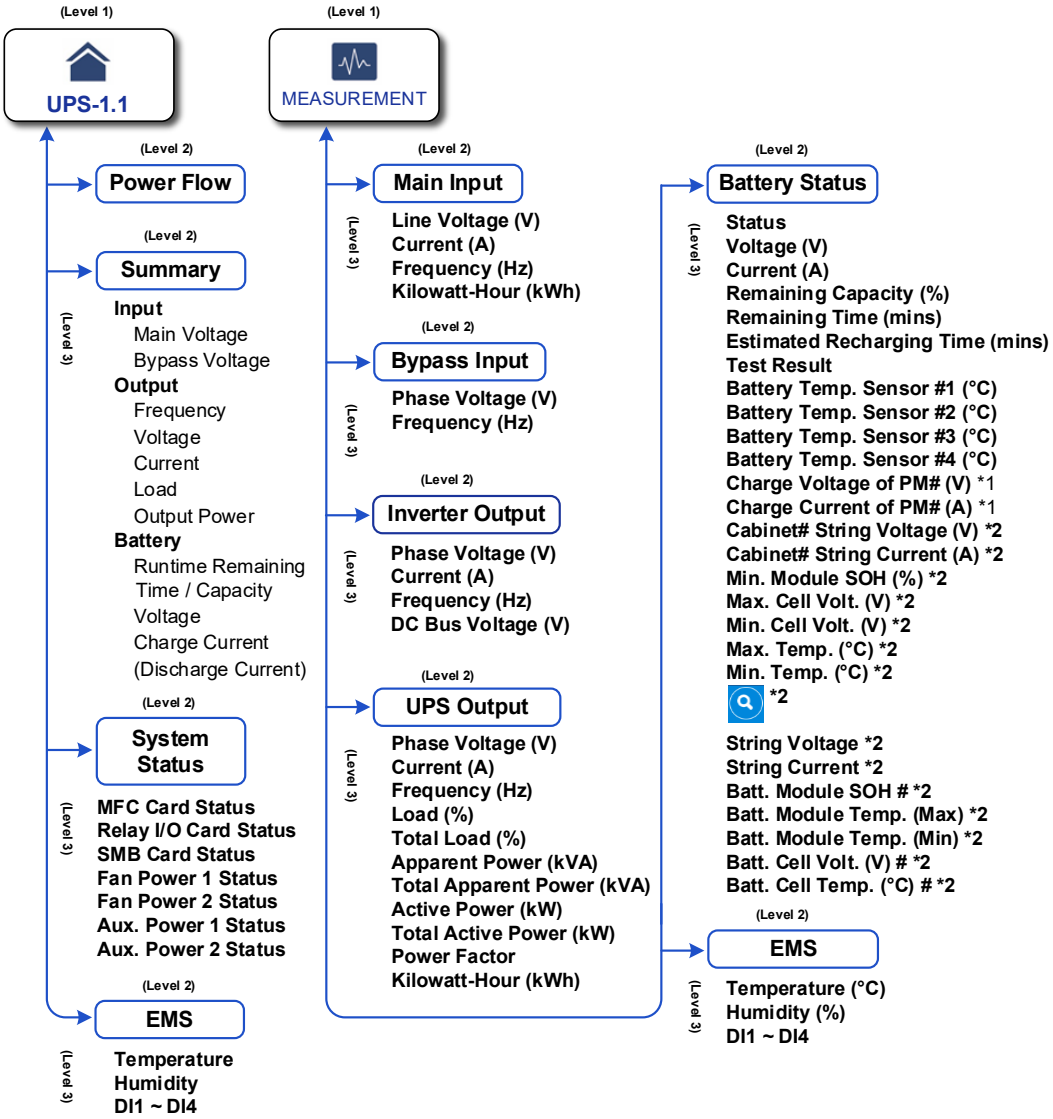

(Level 1)

SETUP

(Level 2)

Bypass Setting *1

(Level 3)

Bypass Frequency Range
Bypass Voltage (Max)
Bypass Voltage (Min)
ECO Voltage Range (±%)

(Level 2)

Mode Setting *1

(Level 3)

On-Line
ECO
Frequency Conversion

(Level 2)

Input & Output Setting *1

(Level 3)

Input
- System Sequential Start
- Input Power Walk-in Slew Rate
- Input Over Current Limit – Stage 1/ Stage 2

Output
- Voltage
- Voltage Compensation
- Frequency
- Slew Rate
- Power Factor
- Async Transfer Time

(Level 2)

Battery & Charging Setting *1

(Level 3)

Battery Type
Battery Rating Voltage
Battery Strings
Battery Low Warning
Battery Cut Off Voltage
Capacity/ Float Charge Voltage
Equalized Charge Voltage
Charge Current (Max)
Auto Equalized Charge
Auto Equalized Charge Interval
Equalized Charge Time
Reduce Charging While on DG
Battery Test Fail Voltage
Battery Test Duration
Auto Battery Test Interval
Low Temperature Alarm
High Temperature Alarm
Installation Date
Next Replacement Date

(Level 2)

Parallel Setting *1

(Level 3)

Parallel Group ID
Parallel ID
Common Battery

(Level 2)

Dry Contact Setting *1

(Level 3)

INPUT DRY CONTACT: 1 ~ 4
OUTPUT DRY CONTACT: 1 ~ 6

(Level 2)

General Setting

(Level 3)

DATE/ TIME
Date Format/ System Time/ Date/ Time
SCREEN
- Screen Brightness
- Screen Sleep (after)

USER
- Language
- Admin Password *1
- On/ Off Button Access *1
- MODBUS ID *1
- Baud Rate *1
- Parity *1

DUST FILTER *1
- Dust Filter Installation
- Dust Filter Installation Date
- Dust Filter Replacement Date

(Level 2)

Net Setting *1

(Level 3)

Host
- Host Name/ System Contact
- System Location
- MAC Address

IPV4
- **Current Status**
  - DHCP Client
  - IP Address
  - Subnet Mask
  - Gateway IP
  - DNS 1 IP
  - DNS 2 IP
  - Search Domain
- **Setting**
  - DHCP Client
  - IP Address
  - Subnet Mask
  - Gateway IP
  - DNS 1 IP
  - DNS 2 IP
  - Search Domain

(Level 1)

SETUP

(Level 2)

Net Setting *1

(Level 3)

IPV6
- **Current Status**
- LLA
- DHCPv6
- DNS 1 IP
- DNS 2 IP
- Search Domain
- IP Address
- Route Entries #N
- **Setting**
- DHCP Client
- IP Address
- Prefix
- Gateway IP
- DNS 1 IP
- DNS 2 IP
- Search Domain

WEB
- HTTP/ HTTPS
- HTTPS Port
- SSL Certificate

REMOTE USER
- Privilege
- Account Name
- Password
- Login Limitation

SNTP
- Time Zone
- Primary Time Server
- Secondary Time Server
- Period Time

DAYLIGHT SAVING
- Daylight Saving
- Daylight Saving From
- Daylight Saving To

SNMP
- SNMP/ SNMP Server Port
- Context Name
- SNMP MIB Download

NMS
- NMS IP/ IP Prefix
- Community String/ Access Level

SNMPV3 USM
- User Name/ Method/ AuthPhrase
- PrivPhrase/ Access Level

MODBUS TCP
- MODBUS TCP/ Slave ID/ Port
- MODBUS TCP Address Table

MODBUS TCP IP List
- Allowed Remote IP/ Access Level

(Level 2)

Net Notification *1

(Level 3)

SNMP TRAP LIST
- Target IP/ Port/ Trap Type
- Community String
- Event Level
- SNMPv3 User Name/ MIB

INFORM
- Timeout/ Retry

MAIL SERVER
- SMTP Server Name or IP
- SMTP Server Port/ Sender
- Account/ Password/ TLS

MAIL LIST
- Receiver/ Event Level/ Email Test

(Level 2)

Control

(Level 3)

Buzzer
Reset Module *1
Reset System *1
Force Equalized Charge *1
Force Bypass to Inverter *1

(Level 2)

EMS Setting

(Level 3)

SENSOR
- ID/ Title/ Status
- Temperature/ Humidity

INPUT CONTACT: 1 ~ 4
- ID/ Title/ Status
- NO/ NC/ Title/ Event Type

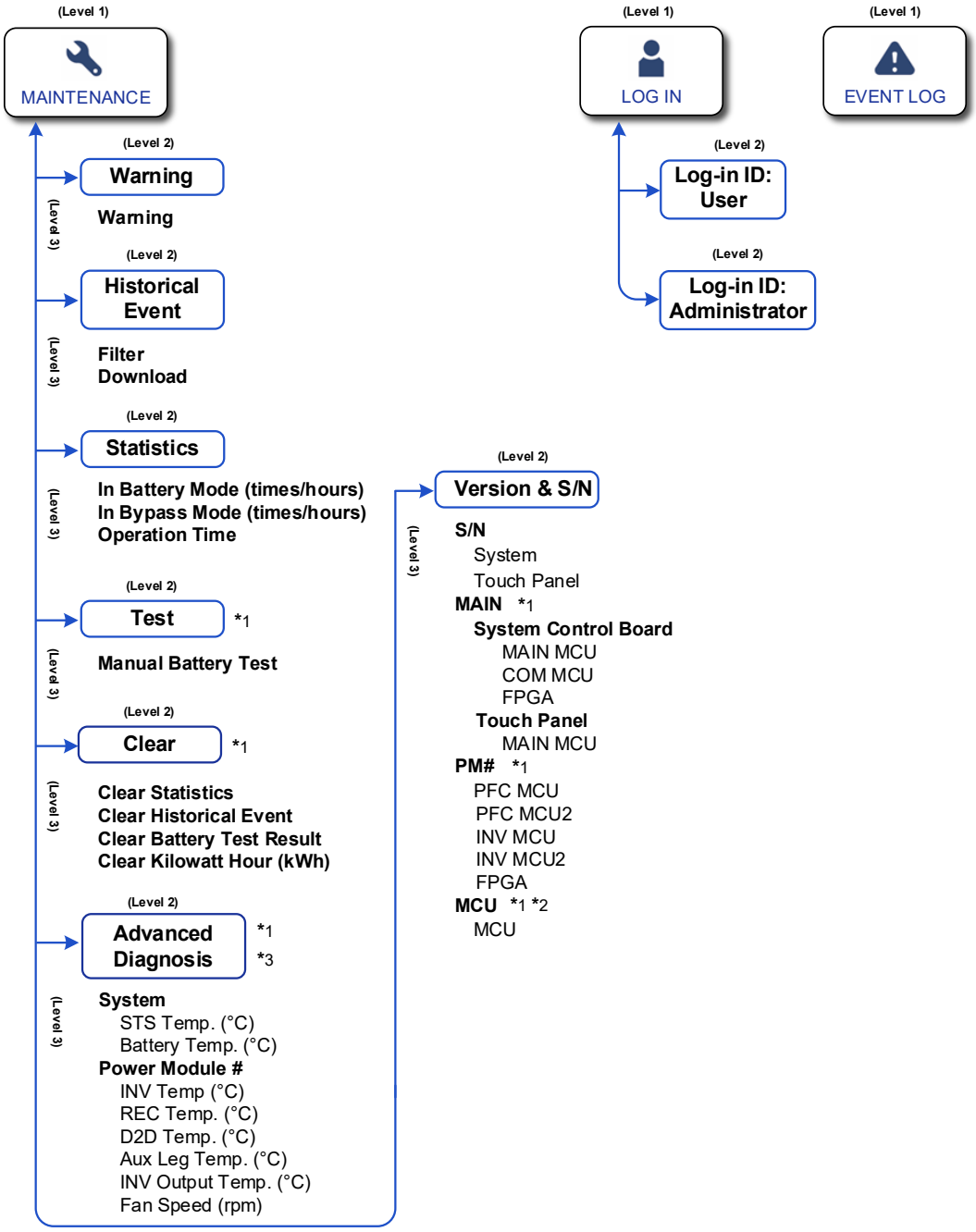

Figure 7-1: LCD Display Hierarchy

NOTE:

1. For **EMS/ EMS Setting**, the functions will be activated only after proper installation and settings of the optional accessories have been completed. For details, refer to *8. Optional Accessories*.
2. *[1] To display the item, you have to log in as **Administrator**. Please refer to *7.4 Password Entry*.

   *[2] The item will show up only when you use the Delta lithium-ion batteries and have installed the optional multifunctional communication card (MFC) in the SMART slot (reserved).

   *[3] This function is optional. If you need to activate it, please contact Delta customer service.
3. The LCD screen diagrams in the user manual are for reference only. The actual display depends on the operation situation.

7.2 How to Turn on the LCD

Step 1

Perform one of the options (a ~ c) below; after that, the LCD will be on.

a. Turn on the Input Breaker (Q1); or

b. Turn on the Bypass Breaker (Q2); or

c. Turn on the external battery cabinet's breaker (Q5) and press the battery start button (see *Figure 4-2*) for 1 second.

Step 2

A short while later, the **Main Screen** will appear with **User Login** status.

If the **ON/ OFF Button** ( ) does not appear on the screen, please log in as **Administrator** first, and then go to SETUP → **General Setting** → **User** → **On/ Off Button Access** to change the setting.

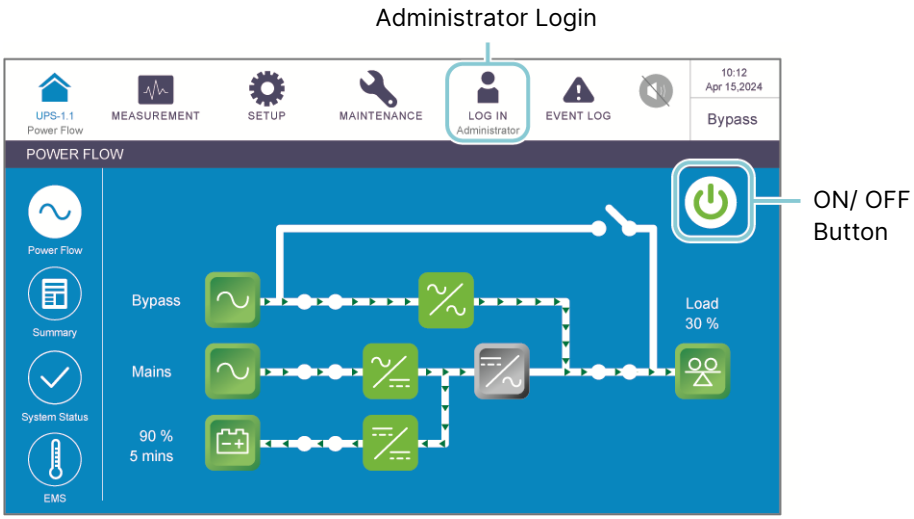

7.3 Introduction of Touch Panel and Function Keys

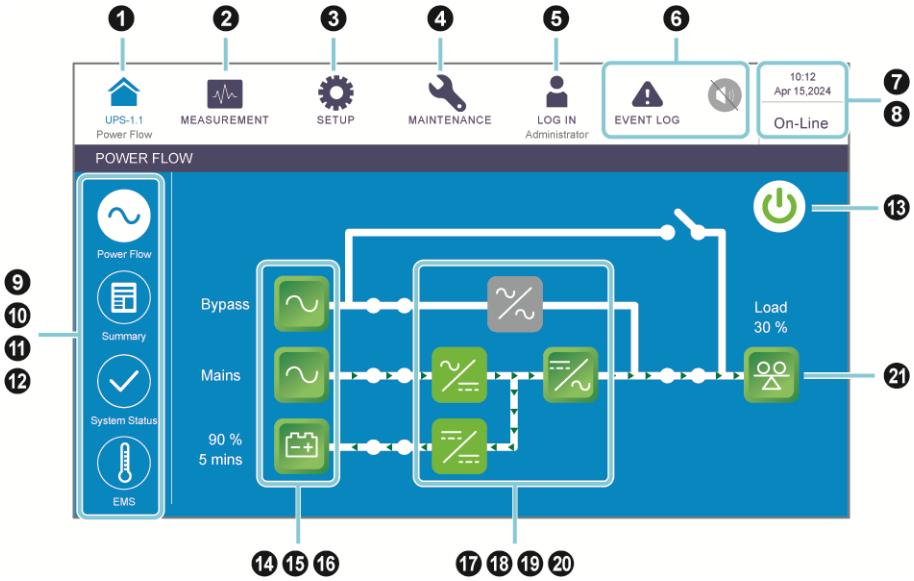

No.	Icon/ Text	Button Function (Yes or No)	Text/ Digital Display (Yes or No)	Symbol Display (Yes or No)	Description
1	UPS-1.1	✓	✓	-	Tap the button to go back to the **Main Screen**. The figure (UPS-1.1) below the icon ( ) indicates the parallel group ID no. (former) and the parallel ID no. (latter). **NOTE:** On the master UPS's screen, you can check its status and readings as well as the slave UPSs' partial statuses and readings. On a slave UPS's screen, you can only check its own status and readings.
2	MEASUREMENT	✓	-	-	Tap the button to open the measurement menu. For the menu items, refer to *Figure 7-1*.
3	SETUP	✓	-	-	Tap the button to open the setup menu. For the menu items, refer to *Figure 7-1*. For details, refer to *7.6 UPS Settings*.
4	MAINTENANCE	✓	-	-	Tap the button to open the maintenance menu. For the menu items, refer to *Figure 7-1*. For details, refer to *7.7 System Maintenance*.
5	LOG IN User	✓	-	✓	It indicates **User** login status. Tap the icon to change the login permission. Please refer to *7.4 Password Entry*.
	LOG IN admin	✓	-	✓	It indicates **Administrator** login status. Tap the icon to change the login permission. Please refer to *7.4 Password Entry*.

No.	Icon/ Text	Button Function (Yes or No)	Text/ Digital Display (Yes or No)	Symbol Display (Yes or No)	Description
6	EVENT LOG	✓	-	✓	1. Historical event screen shortcut button (EVENT LOG). 2. When the icon is blue ( ), it means there is no warning event.
	WARNING 2 WARNING 2	✓	✓	✓	1. Warning screen shortcut button (WARNING 2) & buzzer icon ( ). 2. When the icon is red ( ), it indicates that there is a warning event. At this time, the buzzer will sound and the buzzer icon will appear in red ( ). The numerical value at the upper right of the icon (WARNING 2) indicates the total number of the warning events. To mute the buzzer, tap the icon ( ), and the icon will become gray ( ). If there is any new warning event happening afterwards, the buzzer will sound and the icon ( ) will appear and light up again.
7	10:12 Apr 15,2024	-	✓	-	It indicates the time and date.
8	On-Line Bypass Battery ECO Frequency Conversion	-	✓	-	It indicates the UPS's current operation mode.
9	Power Flow	✓	-	-	Tap the button to check the power flow diagram and the operation status of the UPS.
10	Summary	✓	-	-	Tap the button to check the **Input**, **Output**, and **Battery** summary status of the UPS.

No.	Icon/ Text	Button Function (Yes or No)	Text/ Digital Display (Yes or No)	Symbol Display (Yes or No)	Description
11	System Status	✓	-	-	Tap the button to check the system status.
12	EMS	✓	-	-	Tap the button to check the EMS status. To enable the function, you have to connect an optional EMS 1000 (EnviroProbe) to the UPS and complete relevant settings. For details, refer to *8. Optional Accessories*.
13	/	✓	-	✓	ON/ OFF Button. The gray icon ( ) indicates that the inverter is OFF. The green icon ( ) indicates that the power-on process is completed and the inverter is ON.
14	Bypass	✓	-	✓	1. It indicates bypass input status (Green: Normal/ Red: Abnormal or OFF). 2. Bypass input screen shortcut button.
15	Mains	✓	-	✓	1. It indicates main input status (Green: Normal/ Red: Abnormal or OFF). 2. Main input screen shortcut button.
16	90 % 5 mins	✓	✓	✓	1. It indicates battery status (Green: Normal/ Flashing Green & Gray: Battery Mode/ Flashing Red & Gray: Battery Not Connected). 2. It shows battery remaining capacity (%) and battery remaining time (minutes). 3. Battery status screen shortcut button.
17		-	-	✓	It indicates bypass static switch status (Green: ON/ Gray: Abnormal or OFF).

No.	Icon/ Text	Button Function (Yes or No)	Text/ Digital Display (Yes or No)	Symbol Display (Yes or No)	Description
18		-	-	✓	It indicates rectifier status (Green: Normal/ Gray: Waiting or OFF).
19		✓	-	✓	1. It indicates inverter status (Green: Normal/ Gray: Waiting or OFF). 2. Inverter output screen shortcut button.
20		-	-	✓	DC converter status (Green: Normal; Red: Abnormal; Gray: Waiting or OFF).
21	Load 30 %	✓	✓	✓	1. It indicates output status (Green: Normal/ Gray: No Output). 2. It shows load capacity (%). 3. UPS output screen shortcut button.

Other icons on the touch panel are shown in the table below.

No.	Icon	Function
1		It goes to the top page.
2		It goes to the last page.
3		It moves up.
4		It moves down.
5		It goes to the previous page.
6		It goes to the next page.

No.	Icon	Function
7	▲	Increase
8	▼	Decrease
9	1	1. It indicates the page No. 2. It goes to a specific page according to the No. you key in.
10		Delete
11		Capital
12		Space

NOTE:

1. After the backlight is turned off, you can tap the LCD to return to the **Main Screen**.
2. The sleep time for the backlight can be adjusted. Please go to SETUP → **General Setting** → **Screen** → **Screen Sleep (after)**.
3. If you are logged in as **Administrator**, you will be logged out when the backlight is off. Tap to wake up the LCD screen, and it will go back to the **Main Screen** in the **User** login status. Even if you set up the backlight in '**Never Sleep**' mode, you will still be logged out after the screen is idle for 5 minutes.
4. The default language is English, which differs according to countries. To change the display language, please go to SETUP → **General Setting** → **User** → **Language**.

7.4 Password Entry

1. **Administrator** login requires a password while **User** login does not.
2. Tap LOG IN User → enter the **Administrator** password (contact service personnel for the default password) → the icon LOG IN admin appears, indicating the **Administrator** login is successful.

3. To change the **Administrator** password, please go to SETUP → **General Setting** → **User** → **Admin Password** (4 digits).

7.5 Check Kilowatt-Hour

Path: MEASUREMENT → **Main Input** → **kWh icon** ( )

Path: MEASUREMENT → **UPS Output** → **kWh icon** ( )

Tap the kWh icon ( ) to check the **kWh statistics** of the **Main Input** or **UPS output**. Please refer to the following screens.

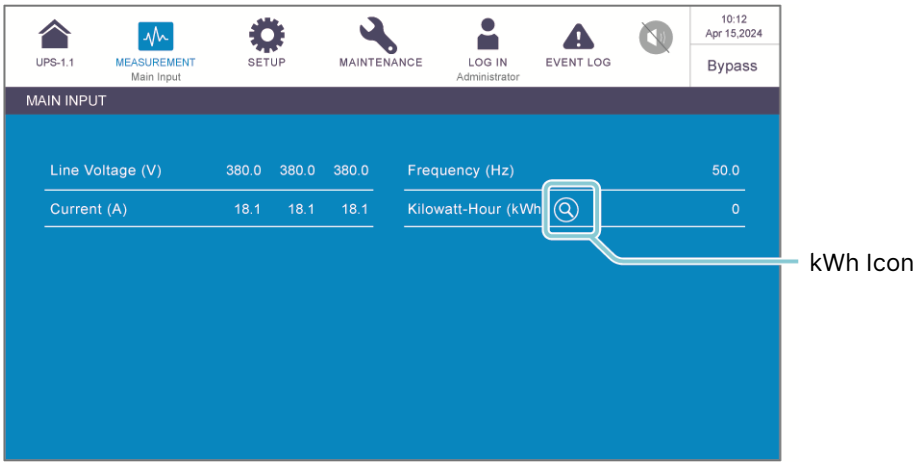

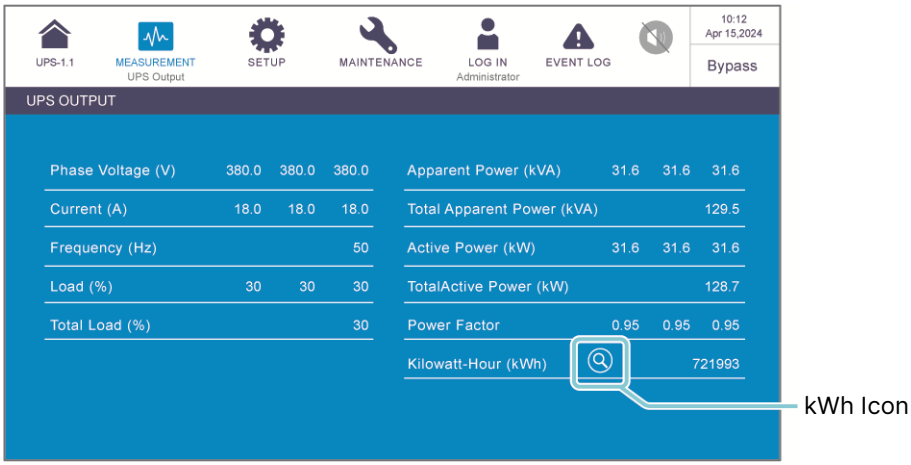

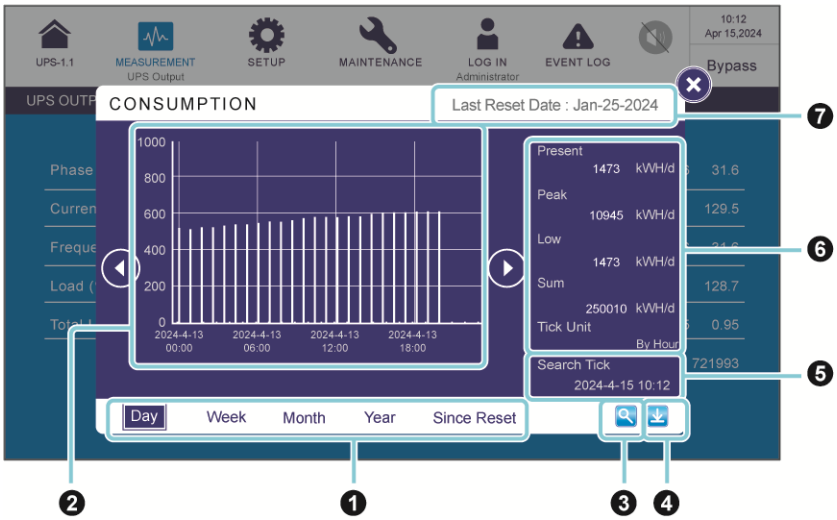

No.	Item	Description
❶	Sheet Tabs (Day/ Week/ Month/ Year/ Since Reset)	Tap the sheet tabs to view the kWh statistics and column charts of different time scales.
❷	Column Chart	1. It shows the UPS's input or output kWh statistics, with time on X-axis and kWh on Y-axis. 2. Tap the column on the chart, and the corresponding piece of data will appear below the chart.
❸	Search Tick Setup Icon	Tap ( ) and you can set the date and time for the '**Search Tick**' to view the corresponding column chart.
❹	Save	Click the icon ( ) to download data to your USB drive.
❺	Search Tick	It shows the date and time that has been set via ( ).
❻	Present/ Peak/ Low/ Sum (kWh/d)	Regardless of different kWh statistics sheets, these four items indicate today's statistics: the present value/ the highest value (so far)/ the lowest value (so far)/ the sum (so far).
❼	Last Reset Date	The last date when '**Clear Kilowatt Hour**' was executed.

7.6 UPS Settings

This chapter lists all the UPS setting items for your reference (not including the setting items for the optional accessories). Some items will show up only under certain conditions. Please refer to *7.1 LCD Display Hierarchy* for details.

7.6.1 Bypass Setting

Path: SETUP **→ Bypass Setting**

Item	Description
Bypass Frequency Range	Set up the bypass output's frequency range.
Bypass Voltage (Max.)	Set up the bypass output's maximum voltage.
Bypass Voltage (Min.)	Set up the bypass output's minimum voltage.
ECO Voltage Range	Set up the bypass output's voltage range in ECO mode.

7.6.2 Mode Setting

Path: SETUP **→ Mode Setting**

Item	Description
On-Line Mode	Set up the UPS in On-Line mode. In On-Line mode, the inverter supplies power to the connected loads.
ECO Mode	Set up the UPS in ECO mode. In ECO mode, the bypass supplies power to the connected loads. It is suggested that you set the UPS in ECO mode only when there is stable main AC power. Otherwise, power supply quality will be compromised.
Frequency Conversion Mode	Set up the UPS in Frequency Conversion mode. In Frequency Conversion mode, the inverter supplies power to the connected loads with a fixed output frequency. Please note that the output will be terminated once the inverter is turned off. **NOTE:** Frequency Conversion mode is only applicable to single UPS but not to parallel UPSs.

7.6.3 Input & Output Setting

Path:

→ **Input & Output Setting**

Item	Sub Item	Description
Input	System Sequential Start	Set up the time interval for the system to be transferred from Battery mode to On-Line mode. The setup will help the generator to handle the whole loads in a sequential manner to avoid generator shutdown due to sudden inrush current.
	Input Power Walk-in Slew Rate	Set up the power supply of the loads being steadily transferred from the battery power to main AC power with a fixed slew rate.
	Input Over Current Limit-Stage 1/ Stage 2	Set up which stage's current should be applied to the input over current limit. There are two selections, **Default** and **Switch By Dry Contact**. If you choose **Default**, the stage 1's current will be applied. If you choose **Switch By Dry Contact**, the following window will pop up to ask you to set up an input dry contact's event as '**Input Current Limit Stage Setting**'. After setup, the system will follow the dry contact's status (normally-open or normally-closed) to decide whether stage 1 or stage 2's current should be applied. Please note that the input dry contacts must be connected first (please refer to ***4.1.6 Input Dry Contacts***) before you set up stage 1 and stage 2's current, and only when you choose **Switch By Dry Contact** can the stage 2' current be set up.
Output	Voltage	Set up the output voltage.
	Voltage Compensation	When the UPS is distant from the loads and there is a voltage drop in the output, you can adjust the INV output voltage amplitude for voltage compensation.

Item	Sub Item	Description
Output (Continued)	Frequency	Set up the output frequency as 50 Hz (default) or 60 Hz. The system will automatically select the output frequency in accordance with the bypass power.
	Slew Rate	Set up the maximum permissible speed for the system output frequency to catch up with the bypass frequency variation.
	Power Factor	Set up the inverter's output power factor.
	Async Transfer Time	When (1) the inverter is not synchronized with the bypass and (2) the loads need to be transferred from bypass to inverter, there will be an interrupted transfer time according to this setup value.

7.6.4 Battery & Charging Setting

Path: SETUP **→ Battery & Charging Setting**

Item	Description
Battery Type	Set up the battery type as **VRLA/ LiB (Dry Contact)**[*1]**/ LiB (Integration)**[*2]. **NOTE:** 1. *1 If you use non-Delta lithium-ion batteries, please set up the battery type as 'LiB (Dry Contact)'. Please refer to ***4.1.6 Input Dry Contacts*** and ***7.6.6 Dry Contact Setting***. For more information about configurations of the lithium-ion batteries, please contact Delta customer service. 2. *2 If you use the Delta lithium-ion batteries, please set up the battery type as 'LiB (Integration)'. The item 'LiB (Integration)' will appear on the LCD only if you use the Delta lithium-ion batteries with the optional multifunctional communication card (MFC) installed in the SMART slot (reserved). Please contact Delta customer service if you need more information.
Battery Rating Voltage	Set up the battery voltage rating.
Battery Strings	Set up how many battery strings that are used on site.

Item	Description
Battery Low Warning	Set up the battery low warning voltage.
Battery Cut Off Voltage	Set up the battery low voltage. In Battery mode, when the battery low voltage is reached, the battery power will be cut off, and the inverter of the UPS will shut down. The loads will then be transferred to bypass if the bypass is available; otherwise, the UPS will shut down.
Capacity	Set up the battery capacity.
Float Charge Voltage	Set up the float charge voltage.
Equalized Charge Voltage	Set up the equalized charge voltage. **NOTE:** The item will only show up if the **Battery Type** is set to '**VRLA**'.
Restored Voltage	Set up the restored voltage. **NOTE:** 1. The item will only show up if the **Battery Type** is set to '**LiB (Integration)**'. When the remaining battery voltage reaches the setup restored voltage, the UPS will automatically activate the charger to re-charge the batteries. 2. If the **Battery Type** is set to '**LiB (Dry Contact)**', the item will not show up.
Charge Current (Max)	Set up the maximum charge current.
Auto Equalized Charge	Enable or disable the auto-equalized charge.
Auto Equalized Charge Interval	Set up the auto equalized charge interval.
Equalized Charge Time	Set up the equalized charge time.

Item	Description
Reduce Charging While on DG	Set up the charging current limit. The charging current will be limited to this value when the generator is turned on. **NOTE:** This setup item will only appear after you select SETUP → **Dry Contact Setting** → **Input** → **Event** → **Generator Status**.
Battery Test Fail Voltage	Set up the battery test fail voltage. When the battery voltage is under the test fail voltage, it means the battery has failed.
Battery Test Duration	Set up how long the battery test should last.
Auto Battery Test Interval	Set up the battery test interval.
Low Temperature Alarm	Enable or disable the low temperature alarm. If enabled, set up the temperature.
High Temperature Alarm	Enable or disable the high temperature alarm. If enabled, set up the temperature.
Installation Date	Record the battery installation date.
Next Replacement Date	Set up the battery replacement date.

7.6.5 Parallel Setting

Path: SETUP → Parallel Setting

Item	Description
Parallel Group ID	The UPSs in parallel connection must be assigned the same parallel group ID no. in order to let the outputs of the parallel UPSs be put in parallel connection and let the loads be evenly distributed among the parallel units. If the parallel UPSs have different parallel group ID no., their output signals might be synchronized but their outputs cannot be connected in parallel.

Item	Description
Parallel ID	The UPSs that need to be paralleled must be assigned the same parallel group ID no. and different parallel ID no. in order to let the parallel function work.
Common Battery	If the parallel UPSs that have the same parallel group ID no. need to share common batteries, please select '**Enable**' for the '**Common Battery**' setup item. Otherwise, the function of battery abnormality detection will fail. For more information about common battery, please refer to ***5.6 External Battery Cabinet Connection Warnings***.

7.6.6 Dry Contact Setting

Path:

→ Dry Contact Setting

Input Dry Contact No.	Event Selection	Type
Input Dry Contact 1 **Input Dry Contact 2** **Input Dry Contact 3** **Input Dry Contact 4**	1. None 2. Generator Status 3. Battery Ground Fail 4. External Battery Breaker Detection 5. Charge Off 6. Active Standby 7. Battery Abnormal Shutdown 8. Input Transformer OTW 9. Output Transformer OTW 10. Battery Fuse Open 11. Input Current Limit Stage Setting 12. Major Battery Abnormal Alarm 13. Minor Battery Abnormal Alarm 14. Force Sync External Source	Set up NO (normally open) or NC (normally closed) for each input dry contact.

Output Dry Contact No.	Event Selection	Type
Output Dry Contact 1 **Output Dry Contact 2** **Output Dry Contact 3** **Output Dry Contact 4** **Output Dry Contact 5** **Output Dry Contact 6**	1. None 2. Load On Inverter 3. Load On Bypass 4. Load On Battery 5. Battery Low 6. Battery Input Abnormal 7. Battery Test Fail 8. Internal Comm. Fail 9. External Parallel Comm. Fail (only applicable to parallel application) 10. Output Overload 11. EPO Activated 12. Load On Manual Bypass 13. Battery Over Temperature 14. Output Voltage Abnormal 15. Battery Need Replacement 16. Bypass Over Temperature 17. Bypass Static Switch Fault 18. UPS Over Temperature 19. Battery Breaker Shunt Trip Via EPO 20. Backfeed Protection 21. General Alarm 22. Load On ECO	Set up NO (normally open) or NC (normally closed) for each output dry contact.

7.6.7 General Setting

Path: SETUP → General Setting

Item	Sub Item	Description
DATE/ TIME	Date Format	Select the date format.
	System Time	Set up the system time manually or automatically. **Manual**: Manually set the time and date by users. **SNTP**: Automatically synchronize with SNTP servers.
	Date	Set up the date.
	Time	Set up the time.
SCREEN	Screen Brightness	Adjust the LCD display brightness (default: 80).
	Screen Sleep (after)	Set up the LCD backlight sleep time (default: 1 minute).
USER	Language	Set up the display language (default: English).
	Admin Password	Set up the administrator password (4 digits).
	On/ Off Button Access	Set up the access for the **ON/ OFF Button** ( ) as '**Any User**' or '**Administrator Only**'.
	MODBUS ID	Set up the MODBUS ID for the MODBUS port located at the rear of the touch panel.
	Baud Rate	Set up the baud rate for the MODBUS port located at the rear of the touch panel.
	Parity	Set up the parity for the MODBUS port located at the rear of the touch panel.

Item	Sub Item	Description
DUST FILTER	Dust Filter Installation	If you have installed any dust filter, please select '**Enable**'; if not, please select '**Disable**'.
	Dust Filter Installation Date	Set up the dust filter installation date. **NOTE:** Only when you select '**Enable**' for '**Dust Filter Installation**' can you set up the item.
	Dust Filter Replacement Date	Set up the dust filter replacement date. When the date is due, the red warning icon (⚠) will automatically appear in the upper right corner of the LCD, and the alarm message '**Replace Dust Filter**' will be displayed. **NOTE:** Only when you select '**Enable**' for '**Dust Filter Installation**' can you set up the item.

7.6.8 Net Setting

Path: SETUP → **Net Setting**

Item	Sub Item	Description
HOST	Host Name	Set up the host name. Length: 16 characters max.
	System Contact	Set up the contact person. Length: 32 characters max.
	System Location	Set up the equipment location. Length: 32 characters max.
	MAC Address	Set up the MAC address of the network interface. It is displayed as six groups of two hexadecimal digits and separated by hyphens.

Item		Sub Item	Description
IPv4	Current Status	DHCP Client	Current DHCP State.
		IP Address	Current IPv4 address.
		Subnet Mask	Current subnet mask address.
		Gateway IP	Current gateway IP address.
		DNS 1 IP	Current DNS server 1's IP address, which can be updated by DHCP.
		DNS 2 IP	Current DNS server 2's IP address, which can be updated by DHCP.
		Search Domain	Current domain. Length: 32 characters max.
	Setting	DHCP Client	Enable or disable DHCP client to obtain the IPv4 address.
		IP Address	Set up the static IPv4 address.
		Subnet Mask	Set up the static IPv4 subnet mask.
		Gateway IP	Set up the IPv4 gateway IP address.
		DNS 1 IP	Set up the DNS server 1's IP address.
		DNS 2 IP	Set up the DNS server 2's IP address.
		Search Domain	Set up the search domain. Length: 32 characters max.
IPV6	Current Status	LLA	Current link local address.
		DHCPv6	Current DHCPv6 state.
		DNS 1 IP	Current DNS server 1's IP address, which can be updated by DHCP.
		DNS 2 IP	Current DNS server 2's IP address, which can be updated by DHCP.
		Search Domain	Current IPv6 domain address. Length: 32 characters max.
		IP Address	Current IPv6 address.
		Route Entries #	Current route's destination and gateway.

Item		Sub Item	Description
IPV6 (continued)	Setting	DHCP Client	Enable or disable DHCP client to obtain the IPv6 address.
		IP Address	Set up the static IPv6 address.
		Prefix	Set up the static IPv6 prefix length. Length: 1 ~ 128 bits.
		Gateway IP	Set up the IPv6 gateway IP address.
		DNS 1 IP	Set up the DNS server 1's IP address.
		DNS 2 IP	Set up the DNS server 2's IP address.
		Search Domain	Set up the search domain. Length: 32 characters max.
WEB		HTTP	Enable or disable HTTP.
		HTTPS	Enable or disable HTTPS.
		HTTPS Port	Set up the HTTPS port No.
		SSL Certificate	Upload the SSL certificate.
REMOTE USER		Privilege	There are three levels, Administrator, Device Manager and User.
		Account Name	Set up the Administrator, Device Manager or User's account name.
		Password	Set up the Administrator, Device Manager or User's password.
		Login Limitation	Set up the Administrator, Device Manager or User's login limitation.
SNTP		Time Zone	Select the time zone.
		Primary Time Server	Set up the primary NTP server.
		Secondary Time Server	Set up the secondary NTP server.
		Period Time	Set up how long the system will automatically synchronize the time with servers.

Item	Sub Item	Description
DAYLIGHT SAVING	Daylight Saving	Enable or disable the daylight saving function.
	Daylight Saving From	Set up the daylight saving beginning time.
	Daylight Saving To	Set up the daylight saving ending time.
SNMP	SNMP	Enable or disable the SNMP function.
	SNMP Server Port	Set up the SNMP server port No.
	Context Name	Define the context name.
	SNMP MIB Download	Download MIB files.
NMS	NMS IP	Set up the NMS IP address that allows connection.
	IP Prefix	Set up the NMS IP mask address that allows connection.
	Community String	Set up the community string.
	Access Level	Set up the access level for each source IP.
SNMPv3 USM	User Name	Set up the SNMPv3 user name.
	Method	Select the encryption method.
	AuthPhrase	Set up the authentication password.
	PrivPhrase	Set up the privacy password.
	Access Level	Set up the access level for each SNMPv3 user.
MODBUS TCP	MODBUS TCP	Enable or disable the MODBUS TCP function.
	Slave ID	Set up the slave ID No.
	Port	Set up the MODBUS TCP port No.
	MODBUS TCP Address Table	Download the MODBUS TCP address table.
MODBUS TCP IP LIST	Allowed Remote IP	Set up the allowed remote IP.
	Access Level	Set up the access level for each remote IP.

7.6.9 Net Notification

Path: SETUP → Net Notification

Item	Sub Item	Description
SNMP TRAP LIST	Target IP	Set up the target IP.
	Port	Set up the target IP's port No.
	Trap Type	Select the trap type.
	Community String	Set up the community string.
	Event Level	Select the event level.
	SNMPv3 User Name	Select the SNMPv3 user name.
	MIB	Select the MIB type.
INFORM	Timeout	Set up the timeout for SNMP INFORM.
	Retry	Set up the number of retries for SNMP INFORM.
MAIL SERVER	SMTP Server Name or IP	Set up the SMTP server's DNS IP.
	SMTP Server Port	Set up the SMTP server's port No.
	Sender	Set up the sender's email address.
	Account	Set up the sender's email login account.
	Password	Set up the sender's email login password.
	TLS/ SSL	Enable or disable the TLS/ SSL function.
MAIL LIST	Receiver	Set up the receiver's email address.
	Event Level	Select the event level. If the event's level is higher than this setting, this event log will be sent.
	Email Test	Test whether the sample event log will be sent.

7.6.10 Control

Path: SETUP → Control

Item	Description
Buzzer	Enable or disable the buzzer.
Reset Module	Reset the power modules or not. In Bypass mode, when you tap the **ON/ OFF Button** ( ) to start up the UPS but the UPS does not respond, please select **'Reset'** to reset the power modules. After the power modules are reset, please tap the **ON/ OFF Button** ( ) to start up the UPS.
Reset System	Reset the system or not. In Bypass mode, when you tap the **ON/ OFF Button** ( ) to start up the UPS but the UPS does not respond, please select '**Reset**' to reset the system. After the system is reset, please tap the **ON/ OFF Button** ( ) to start up the UPS.
Force Equalized Charge	Manually force the UPS to run in auto equalized charge mode to charge the batteries.
Force Bypass to Inverter	Manually force the UPS to switch from bypass to inverter when the inverter keeps staying in the soft-start status and is unable to transfer to On-Line mode successfully.

7.7 System Maintenance

7.7.1 Warning

Path 1: MAINTENANCE → Warning

Path 2: When there is a warning, the buzzer icon ( ) will light up in red, and the buzzer will sound. Tap the warning icon (WARNING) to enter the **WARNING** screen.

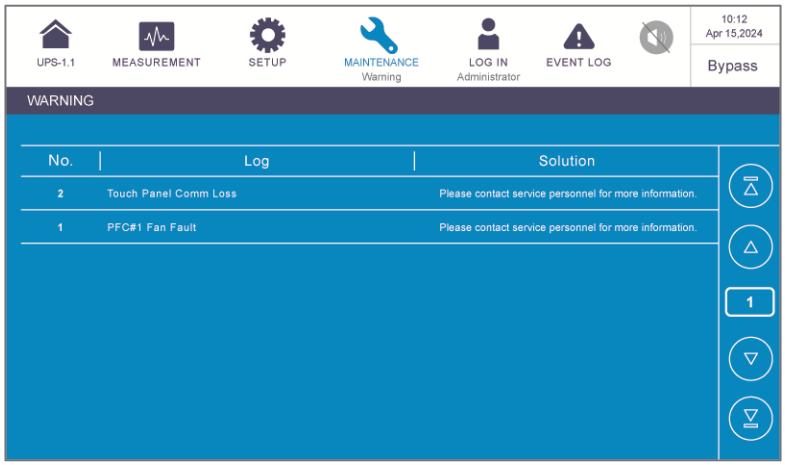

7.7.2 Historical Event

Path: → Historical Event

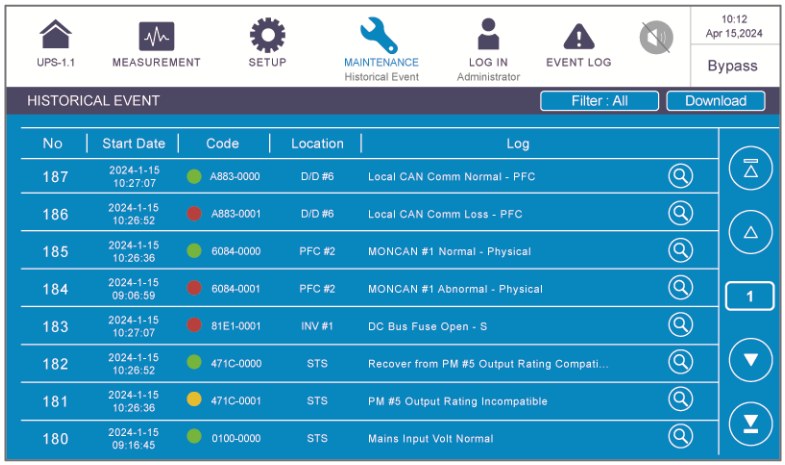

7.7.3 Statistics

Path: → Statistics

Item	Description
In Battery Mode (times/hours)	It shows how long and how many times the UPS runs in Battery mode.
In Bypass Mode (times/hours)	It shows how long and how many times the UPS runs in Bypass mode.
Operation Time	It shows how long the UPS has operated.

To clear the statistics, please refer to *7.7.5 Clear*.

7.7.4 Test

Path: MAINTENANCE → **Test**

You can perform the manual battery test via the LCD screen.

7.7.5 Clear

Path: MAINTENANCE → **Clear**

Item	Description
Clear Statistics	After you select '**Clear**' and confirm clearance of statistics, all records of the statistics will be cleared.
Clear Historical Event	After you select '**Clear**' and confirm clearance of historical event logs, all historical event logs will be cleared.
Clear Battery Test Result	After you select '**Clear**' and confirm clearance of battery test result, the battery test result will be cleared.
Clear Kilowatt Hour (kWh)	After you select '**Clear**' and confirm clearance of kilowatt hour records, the kilowatt hour statistics will be cleared.

NOTE:

The records mentioned above are important information for system analysis and maintenance. Do not clear any of them without the consent of qualified service personnel.

7.7.6 Advanced Diagnosis

Path: MAINTENANCE → **Advanced Diagnosis**

This is an optional function. Please contact Delta customer service for more information. If you are able to access the **Advanced Diagnosis** screen, you can obtain the system and the specific power module's relevant readings of the following items.

Location	System	Power Module #
Item	STS Temp. (°C)	INV Temp. (°C)
	Battery Temp. (°C)	REC Temp. (°C)
	-	D2D Temp. (°C)
	-	Aux. Leg Temp. (°C)
	-	INV Output Temp. (°C)
	-	Fan Speed (rpm)

7.7.7 Version & S/N

NOTE:

To operate the UPSs in parallel, please make sure all the versions below are the same for each parallel unit. If you have any questions about parallel operation, please contact Delta customer service.

Path: MAINTENANCE **→ Version & S/N**

Item	Sub Item	Description
S/N	System	Check the system's serial No.
	Touch Panel	Check the touch panel's serial No.
MAIN	System Control Board	Check and update the MAIN MCU, COM MCU or FPGA firmware version of the system control board.
	Touch Panel	Check and update the MAIN MCU firmware version of the touch panel.
PM	PM1	Check and update the PFC MCU, PFC MCU2, INV MCU, INV MCU2 or FPGA firmware version of the power module.

Chapter 8 : Optional Accessories

No.	Item	Function
1	Dust Filter	It prevents dust from entering into the UPS to ensure UPS reliability and to prolong product life.
2	EMS 1000 (EnviroProbe)	It monitors temperature, humidity and other connected monitoring devices in a room environment. Connect the EMS 1000 (EnviroProbe) to the UPS's EMS port located at the rear of the touch panel, and the UPS will integrate the detected information from the EMS 1000 (EnviroProbe) and display relevant data on the LCD. See *Figure 4-14* for the location of the EMS port. For details, please refer to *8.1 EMS Function on the LCD Screen*.
3	Battery Cabinet Temperature Sensor Cable	It detects the temperature of an external battery cabinet connected to the UPS.
4	Parallel Cable (Length: 20 m (787.4"))	It connects to the parallel UPSs.
5	Top Water-resistant Cover	It prevents water droplets or other liquids from entering the UPS and causing electrical hazards.
6	Synchronized Multiple Bus (SMB) Card	It synchronizes the output frequency and phase of each multiple-bus system to ensure that two or more systems are switched in synchronization.
7	External Synchronization Connector	It synchronizes the output frequency and phase of an external voltage source (ex. generator, UPS, grid, etc.).
8	Dry Contact Card	It increases the dry contact quantity to expand and enhance the function of input and output dry contact.

NOTE:

For installation and operation details, please refer to the *Quick Guide* or *User Manual* included in the package of the optional accessory. To purchase any accessory mentioned above, please contact your local dealer or customer service.

8.1 EMS Function on the LCD Screen

- **Path 1: Tap the shortcut button (EMS) on the Main Screen.**

  Path 2: MEASUREMENT → EMS

The UPS can display the information of the optional EMS 1000 (EnviroProbe) on the **EMS** screen. To activate it, please connect the EMS 1000 (EnviroProbe) to the UPS and complete relevant settings.

NOTE:

1. The **EMS** screen is related to the settings shown in SETUP → **EMS Setting**. The settings can be adjusted according to your needs.
2. For installation of the optional EMS 1000 (EnviroProbe), please refer to the instructions below and the ***EnviroProbe 1000 Quick Guide*** included in its package.

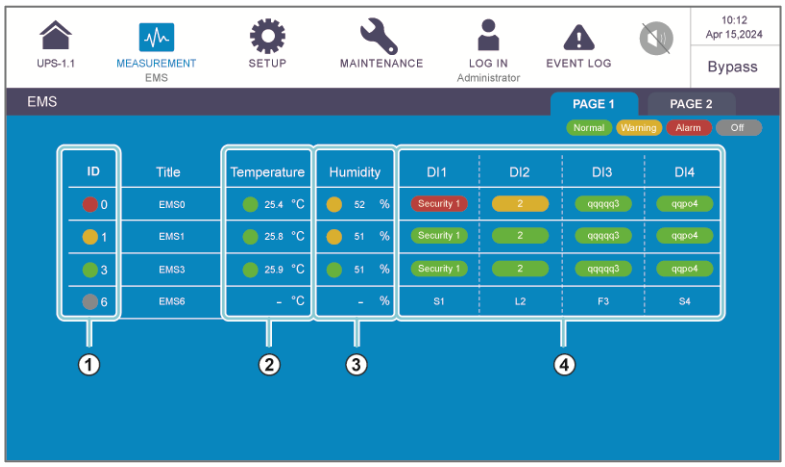

No.	Item	Color (Status)	Descriptions
1	ID	Green (Normal) Yellow (Warning) Red (Alarm) Gray (Off)	1. ID # represents each EMS 1000 (EnviroProbe) device which is connected and set to '**Enable**'. 2. It shows the integrated status of each EMS 1000 (EnviroProbe) device. The integrated status is determined by the most severe status among **Temperature** (°C), **Humidity** (%) and **DI1 ~ DI4**.

No.	Item	Color (Status)	Descriptions
2	**Temperature**	Green (Normal) Yellow (Warning) Red (Alarm)	It shows the statuses of Temperature/ Humidity based on the EMS settings. • **Green (Normal):** lower than the set Warning value. • **Yellow (Warning):** higher than the set Warning value, but lower than the set Alarm value. • **Red (Alarm):** higher than the set Alarm value. If **Red** (**Alarm)/ Yellow (Warning)** is triggered, the status will recover only when the detected value is lower than the **Recovery** value.
3	**Humidity**	Green (Normal) Yellow (Warning) Red (Alarm)	
4	**DI1**	Green (None/ Information) Yellow (Warning) Red (Alarm)	1. It shows the statuses of the input contacts. 2. The **Title**, **NO/ NC**, and **Event Type** can be adjusted according to your needs.
	DI2		
	DI3		
	DI4		

- **Connecting to the Optional EMS 1000 (EnviroProbe)**

  1. Each UPS can be connected to a maximum of 16 EMS 1000 (EnviroProbe) devices in a string to expand the environmental monitoring range. A maximum of 8 UPS units can be paralleled. Please use a CAT-5 cable (user-supplied & the cable length depends on the on-site application and environment) to connect the EMS 1000 (EnviroProbe) to the EMS port on the UPS. For the location of the EMS port, please see *Figure 4-14*.

  2. The UPS only supports RS-485 communication. When installing the EMS 1000 (EnviroProbe), please set the device's communication mode as RS-485 following section *3-1 Comm DIP Switch Settings* of the *EnviroProbe 1000 Quick Guide*.

  3. When installing, please set the ID # by the four ID DIP switches on the left of the device following section *3-2 ID DIP Switch Settings* of the *EnviroProbe 1000 Quick Guide*.

     NOTE:

     The ID # of each EMS 1000 (EnviroProbe) device connected to the UPS must be different so that the UPS can identify each device.

  4. To enable the EMS function, you have to set up relevant items on the LCD after connecting the optional EMS 1000 (EnviroProbe) to the UPS.

- Path: SETUP → EMS Setting (Administrator login is required)

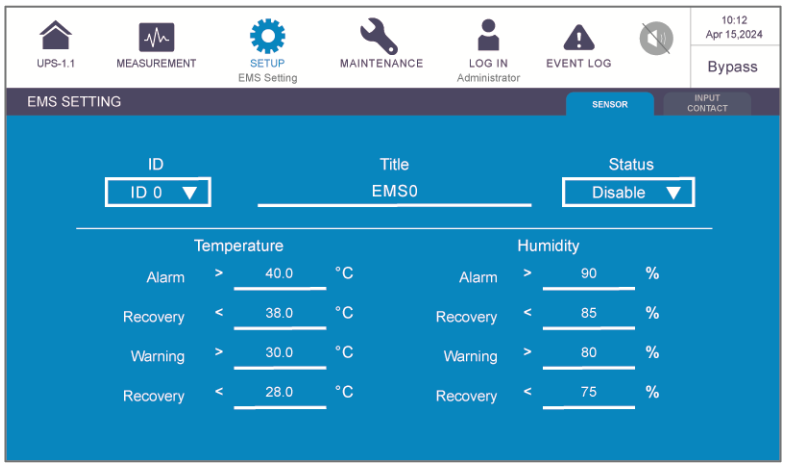

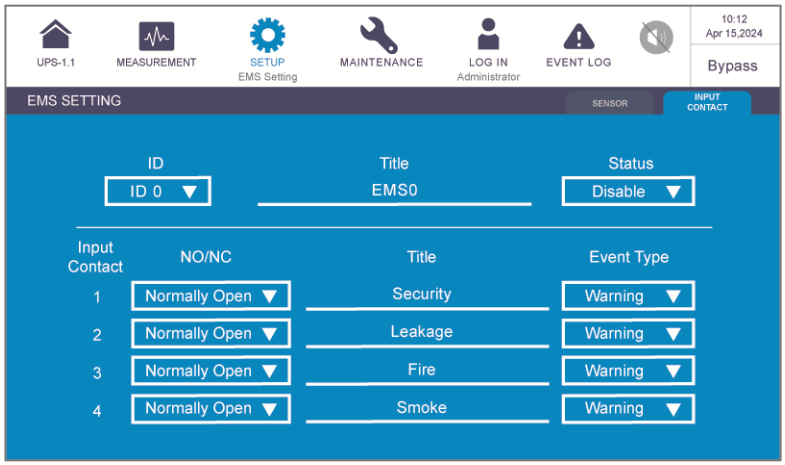

NOTE:

The default values are shown in the figures above.

Item	Sub Item	Description
SENSOR	ID	Set the ID # (ID 0/ ID 1/ .../ ID 15) according to the ID DIP switch setting of the EMS 1000 (EnviroProbe) device. **NOTE:** If the ID # setting is wrong, the warning message '**The EMS 1000 ID # Communication Fail**' will appear.

Item	Sub Item	Description
SENSOR (continued)	Title	Set the title for each EMS 1000 (EnviroProbe) device.
	Status	The status '**Enable/ Disable**' determines whether or not the LCD shows the information of the EMS 1000 (EnviroProbe) device (ID #) on the screen.
	Temperature	Set the temperature (°C) values for Alarm/ Warning/ Recovery.
	Humidity	Set the humidity (%) values for Alarm/ Warning/ Recovery.
INPUT CONTACT	Input Contact 1	1. Set each input contact as Normally Open (NO)/ Normally Closed (NC). 2. Set the title for each input contact. 3. Set the event type as None/ Information/ Warning/ Alarm.
	Input Contact 2	
	Input Contact 3	
	Input Contact 4	

8.2 MFC Function on the LCD Screen

The **PAGE 3** & **MFC** screens (see the figures below) will only appear on the LCD if you use the Delta lithium-ion batteries with the optional multifunctional communication (MFC) card installed in the SMART slot (reserved). For the location of the reserved SMART slot, please refer to *Figure 4-2*. Please contact Delta customer service if you need more information.

- **Path:** MEASUREMENT **→ Battery Status**

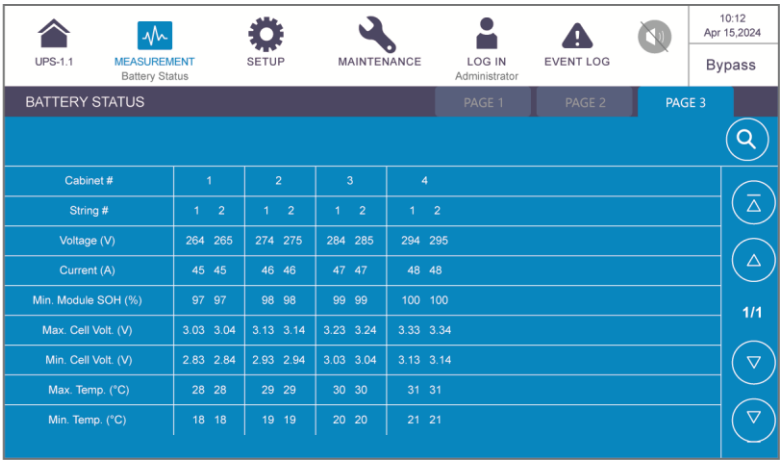

In the screen shown above, you can view the corresponding battery cabinet's **String Voltage**, **String Current**, **Min. Module SOH** (State of Health), **Max. Cell Volt.**, **Min. Cell Volt.**, **Max. Temp** and **Min. Temp**.

- **Path:** SETUP **→ General Setting (Administrator login is required) → MFC**

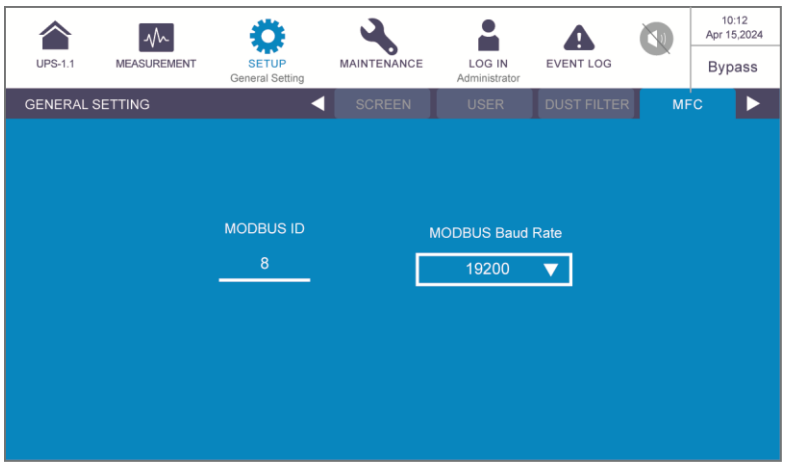

Item	Sub Item	Description
MFC	MODBUS ID	Set up the MODBUS ID for the optional multifunctional communication card (MFC).
	MODBUS Baud Rate	Set up the MODBUS baud rate for the optional multifunctional communication card (MFC).

- Path: MAINTENANCE → Version & S/N

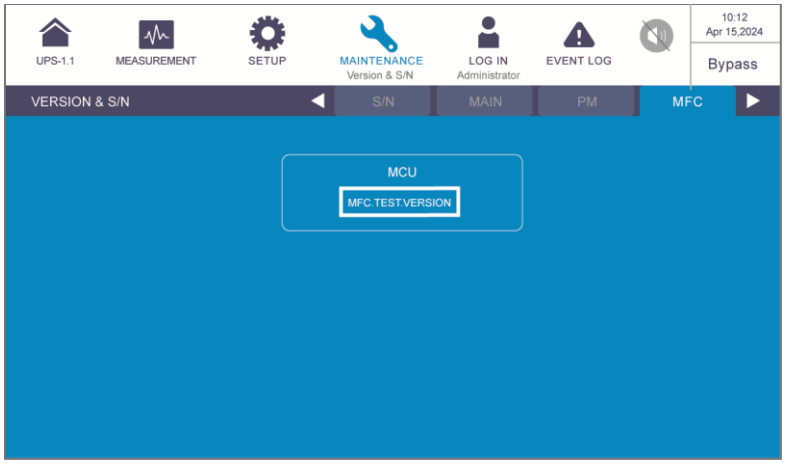

Item	Sub Item	Description
MFC	MCU	Check and update the MCU firmware version of the optional multifunctional communication card (MFC).

Chapter 9 : Maintenance

NOTE:
Please ask your local dealer or customer service for more maintenance information. Do not perform maintenance if you are not trained for it.

- **UPS**

1. UPS Cleaning:

   Regularly clean the UPS, especially the slits, openings and filters, to ensure that the air freely flows into the UPS to avoid overheating. If necessary, use an air blower to clean the slits and openings and replace the filters regularly to prevent any object from blocking or covering these areas.

2. UPS Regular Inspection:

   a. Monthly check the filters and regularly replace them.
   b. Biannually check the UPS and inspect:
      1) Whether the UPS, LED indicators and alarm function normally.
      2) Whether the UPS works in Bypass mode (normally, the UPS works in On-Line mode). If yes, check if any error, overload, internal fault, etc. occur.
      3) Whether the battery voltage is normal. If the battery voltage is too high or too low, find the root cause.

- **Batteries**

The UPS uses the lead-acid batteries or lithium-ion batteries. Make sure to replace the batteries according to the battery life. The actual battery life depends on the ambient temperature, usage, and charging/ discharging frequency. High temperature environments and high charging/ discharging frequency will quickly shorten the battery life; thus, battery inspection and maintenance are required periodically. Please follow the suggestions below to ensure the normal battery life.

1. Keep usage temperature at 15°C ~ 25°C (59°F ~ 77°F).
2. When the UPS needs to be stored for an extended period of time, the lead-acid batteries must be recharged once every three months and the charging time must not be less than 24 hours each time. As for the lithium-ion batteries, please contact your battery supplier for the charging frequency and charging duration.

- **Fans**

Higher temperature will shorten fan life. When the UPS is running, please check if all fans work normally and make sure air can move freely around and through the UPS. If not, please replace abnormal fans.

Chapter 10 : Warranty

Seller warrants this product, if used in accordance with all applicable instructions, to be free from original defects in material and workmanship within the warranty period. If the product has any failure within the warranty period, Seller will repair or replace the product at its sole discretion according to the failure situation.

This warranty does not apply to normal wear or to damage resulting from improper installation, operation, usage, maintenance or irresistible force (i.e. war, fire, natural disaster, etc.), and this warranty also expressly excludes all incidental and consequential damages.

Maintenance service for a fee is provided for any damage out of the warranty period. If any maintenance is required, please directly contact the supplier or Seller.

WARNING:

The individual user should take care to determine prior to use whether the environment and the load characteristics are suitable, adequate or safe for the installation and the usage of this product. The User Manual must be carefully followed. Seller makes no representation or warranty as to the suitability or fitness of this product for any specific application.

No. : 501331790508

Version : V 5.8

Release Date : 2026_10_15

Global Headquarter

Taiwan
Delta Electronics Inc.
30 Section 2, Huandong Road, Shanhua District,
Tainan City 74144, Taiwan
T +886 6 505 6565
E ups.taiwan@deltaww.com

Product Security Incident Response Team (PSIRT)
Delta Electronics, Inc.
No. 186, Ruey Kuang Road,
Neihu District Taipei City 114501, Taiwan
E Delta.PSIRT@deltaww.com

URL

Regional Office

Netherland
Delta Electronics (Netherlands) B.V.
Zandsteen 15, 2132 MZ Hoofddorp, The Netherlands
T +31 (0)20 800 3900
E info@delta-emea.com

Poland
Delta Electronics (Poland) Sp. z.o.o.
23 Poleczki St., 02-822 Warszawa, Poland
T +48 22 335 2600
E ups.poland@deltaww.com

Brazil
Delta Electronics Brasil Ltda.
Estrada Velha Rio-São Paulo, 5300 – Eugênio de Melo –
CEP 12247-001 São José dos Campos-SP-Brazil
T +55 12 39322300
E ups.brazil@deltaww.com

Peru
Delta Electronics (Peru) Inc. S.R.L.
Av. Pardo y Aliaga 699 Of. 601, San Isidro Lima, Peru.
T +51 962 834 287
E ups.peru@deltaww.com

China
Delta GreenTech (China) Co., Ltd.
238 Minxia Road, Pudong, Shanghai, 201209 P.R.C
T +86 21 5863 5678
+86 21 5863 9595
E ups.china@deltaww.com

South Korea
Delta Electronics (Korea), Inc.
1511, Byucksan Digital Valley 6-cha, Gasan-dong, Geumcheon-gu,
Seoul, Korea, 153-704
T +82-2-515-5303
E ups.south.korea@deltaww.com

Thailand
Delta Electronics (Thailand) Public Co.,Ltd.
909 Soi 9, Moo 4, E.P.Z., Bangpoo Industrial Estate,
Tambon Phraksa, Amphur Muang-samutprakarn,
Samutprakarn Province 10280, Thailand
T +662 709-2800
E ups.thailand@deltaww.com

Philippines
Eltek Power Inc./ Delta
302 Orient Square Bldg
F. Ortigas JR Road, Barangay
San Antonio, Pasig City
1605 Philippines
E ups.philippines@deltaww.com

Australia
Delta Electronics (Australia) Pty Ltd.
St Leonard's Corporate Centre
Unit 18/39 Herbert Street, St Leonards NSW 2065, Australia
T +61 2 9479 4200
E ups.australia@deltaww.com

UK
Delta Electronics (UK) Ltd.
Eltek House, Unit 1 Cleveland Road, Hemel Hempstead,
Hertfordshire, HP2 7EY, UK
T +44 1442 210805
E sales.gb@eltek.com

U.S.A
Delta Electronics (Americas) Ltd.
46101 Fremont Blvd. Fremont, CA 94538
T +1 510 668 5100
E ups.na@deltaww.com

Colombia
Delta Electronics Colombia SAS
Cra 72 # 95 – 51 Bodega 16, Parque Empresarial
Los Lagartos Bogota DC, Colombia
T +57 317 4052794
E ups.colombia@deltaww.com

India
Delta Electronics India Pvt. Ltd.
Plot No. 43, Sector-35, HSIIDC, Gurgaon-122001,
Haryana, India
T +91 124 4874 900
E ups.india@deltaww.com

Japan
Delta Electronics (Japan), Inc.
2-1-14 Shibadaimon, Minato-Ku, Tokyo, 105-0012,
Japan
T +81-3-5733-1111
E jpstps@deltaww.com

Singapore
Delta Electronics Int'l (Singapore) Pte Ltd.
17 Kallang Junction, #01-01, TRION,
Singapore 339274
T +65 6747 5155
E ups.singapore@deltaww.com

Vietnam
Delta Electronics (Vietnam) Co., Ltd.
6th floor Gems Empire Tower, No. 201 Truong Chinh street,
Phuong Liet Ward, Ha Noi City, Vietnam
T +84 974 766 198
E ups.vietnam@deltaww.com

Indonesia
Delta Electronics International (S) Pte Ltd.
Soho Capital, 30th Fl, Unit SC3009
Jl. Letjend S. Parman kav 28. Jakarta 11470 Indonesia
T + 65 9667 4687
E ups.indonesia@deltaww.com

Smarter. Greener. Together.

5013317905