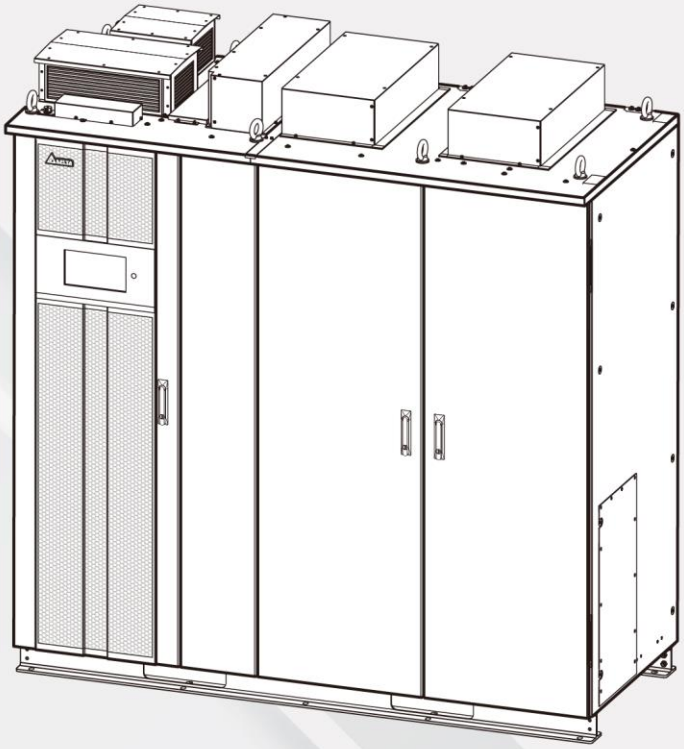

The power behind competitiveness

Delta Infrasuite Power Management

Static Transfer Switch (STS), 380/ 400/ 415 Vac

1250 A

User Manual

www.deltaww.com

SAVE THIS MANUAL

This manual contains important instructions and warnings that you should follow during the installation, operation, storage and maintenance of this product. Failure to heed these instructions and warnings will void the warranty.

Copyright © 2026 by Delta Electronics Inc. All Rights Reserved. All rights of this User Manual (“Manual”), including but not limited to the contents, information, and figures are solely owned and reserved by Delta Electronics Inc. (“Delta”). The Manual can only be applied to the operation or the use of this product. Any disposition, duplication, dissemination, reproduction, modification, translation, extraction, or usage of this Manual in whole or in part is prohibited without the prior written permission of Delta. Given that Delta will continuously improve and develop the product, changes may be made to the information in this Manual at any time without obligation to notify any person of such revision or changes. Delta will make all possible efforts to secure the accuracy and the integrity of this Manual. Delta disclaims any kinds or forms of warranty, guarantee, or undertaking, either expressly or implicitly, including but not limited to the completeness, faultlessness, accuracy, non-infringement, merchantability or fitness for a particular purpose of the Manual.

Table of Contents

SAVE THIS MANUAL 2

Chapter 1 : Important Safety Instructions 6

1.1 Installation Warnings 6

1.2 Connection Warnings 7

1.3 Usage Warnings 7

1.4 Storage Warnings 8

1.5 Standard Compliance 8

Chapter 2 : Introduction 9

2.1 General Overview 9

2.2 Technical Specifications 9

2.3 Package Inspection 11

2.4 Functions & Features 12

2.5 Exterior & Dimensions 12

2.6 Front View 13

2.7 Internal View with Front Doors Open and Top Covers Removed 14

2.8 Internal View with Front Bottom and Side Bottom Covers Removed 15

2.9 Top View with Three Top Wiring Terminal Covers Removed 16

2.10 Tri-color LED Indicator & Buzzer 17

Chapter 3 : Operation Modes 18

3.1 Normal 18

3.2 Auto Transfer 18

3.2.1 Manual Transfer 18

3.2.2 Automatic Retransfer 18

3.2.3 Automatic Retransfer Inhibited 19

3.2.4 Emergency Transfer 19

3.3 Load Current Transfer Inhibited 19

3.4 SCR Failure 19

3.5 Manual Bypass 19

Chapter 4 : Communication Interfaces 20

4.1 Communication Interfaces (I): on the Front of the STS with Its Front Doors Open & on the Top of the STS 20
4.1.1 Control Cards 21
4.1.2 Communication Interface Card 22
4.1.2.1 Display Port 22
4.1.2.2 EPO Dry Contacts 22
4.1.2.3 Breaker Status Input Dry Contacts 22
4.1.2.4 Output Dry Contacts 22
4.1.2.5 Input Dry Contacts 23
4.1.2.6 Active Source LED Indicators (S1/ S2) 24
4.1.3 Auxiliary Power Cards 24
4.1.4 BMS Port 25
4.1.5 Breaker Trip Card 25
4.2 Communication Interfaces (II): at the Rear of the Touch Panel 26
4.3 Cable Routing for the Communication Interfaces 27
Chapter 5 : Installation and Wiring 30
5.1 Before Installation and Wiring 30
5.2 Installation Environment 30
5.3 Transportation 32
5.4 How to Move the STS to a Designated Area 33
5.5 Installation 36
5.6 Wiring 39
5.6.1 Pre-wiring Warnings 39
5.6.2 Wiring Procedures 41
5.6.3 Load Bank Connection 46
Chapter 6 : STS Operation 47
6.1 Turn-on Procedures 47
6.2 Turn-off Procedures 48
6.3 Manual Bypass Procedures 49
6.3.1 Manual Bypass Procedures for Source 1 50
6.3.2 Manual Bypass Procedures for Source 2 52

Chapter 7 : LCD Display & Settings 55
7.1 LCD Display Hierarchy 55
7.2 How to Turn on the LCD 58
7.3 Introduction of Touch Panel and Function Keys 58
7.4 Password Entry 63
7.5 Measurement 63
7.5.1 Input 63
7.5.2 Output 64
7.5.2.1 Check Kilowatt-Hour 65
7.5.3 THD 66
7.5.4 Fan and Temperature 67
7.5.5 Statistics 67
7.5.6 Waveform Records 68
7.6 STS Settings 68
7.6.1 Input Setting 69
7.6.2 Output Setting 69
7.6.3 Control 69
7.6.4 Dry Contact Setting 70
7.6.5 General Setting 71
7.6.6 IP Setting 72
7.6.7 Network Service 72
7.7 System Maintenance 73
7.7.1 Warning 73
7.7.2 Event Log 73
7.7.3 Clear 74
7.7.4 S/ N 75
7.7.5 Version 75
Chapter 8 : Optional Accessories 76
Chapter 9 : Maintenance 77
Chapter 10 : Warranty 78

Chapter 1 : Important Safety Instructions

1.1 Installation Warnings

- This is a three-phase four-wire static transfer switch (hereafter referred to as 'STS'). It can be used for commercial and industrial applications.
- Install the STS in a well-ventilated indoor area, away from excess moisture, heat, dust, flammable gas or explosives. To avoid fire accidents and electric shock, the indoor area must be free of **conductive** contaminants. For the temperature and humidity specifications, please refer to *2.2 Technical Specifications*.
- Leave adequate space around all sides of the STS for proper ventilation and maintenance. Please refer to *5.2 Installation Environment*.
- Only Delta Engineer and/ or Delta service partner are authorized to perform startup, commissioning and maintenance of Delta Equipment. All unauthorized startup or maintenance will void the Delta warranty.
- Do not drill holes on the STS. Drilling operations must be approved by the Delta's Field Service Representative (FSR) department in advance. Failure to heed these instructions and warnings will void the warranty.
- Do not step, stand, or sit on the STS; otherwise, personal injury and/ or equipment damage may occur.
- Follow the drilling instructions listed below:

  1. **Removal of All Relevant Cover Plates**

     Before performing any drilling, remove all relevant cover plates from the equipment chassis. Never drill a plate directly while it is attached to the chassis.

  2. **External Drilling Only**

     All drilling operations must be performed outside the equipment room (or in a designated clean area). Carrying out these tasks in a separate workshop or outdoor environment ensures that metal shavings, dust and debris do not become airborne near the active machinery.

  3. **Prevention of Foreign Object Debris (FOD)**

     Electronics inside the STS are highly susceptible to foreign object debris (FOD) because metal fragments are conductive. Even if microscopic metal shavings enter the equipment, it can cause following issues.

     - Short circuits across high-voltage terminals
     - Intermittent signal interference on logic boards
     - Cooling fan failure or mechanical blockages

WARNING:

Failure to (1) remove relevant cover plates and (2) drill in a controlled environment outside the equipment room will void the warranty and cause immediate equipment failure upon power-up.

1.2 Connection Warnings

- Before applying electrical power to the STS, make sure that the STS is grounded to avoid a possible risk of current leakage.
- Both input source 1 (S1) and source 2 (S2) require upstream circuit breakers for overload protection (provided by the customer). Refer to the table below for recommended rating.

Rated Operational Voltage (Ue)	Rated Current (In)	Interrupting Rating
600 Vac	1250 A	IEC 65kA @ 415 V

1.3 Usage Warnings

- Only qualified service personnel can upgrade the STS's firmware.
- Before installation, wiring and working on the STS's internal circuits, please cut off all power supplying to the STS completely.
- Do not install or wire the STS until both input sources are de-energized.
- The vents and openings on the STS are designed for heat dissipation and should not be blocked or covered at any time.
- Before applying electrical power to the STS, you must allow the STS to adjust to room temperature 20°C ~ 25°C (68°F ~ 77°F) for at least one hour and ensure that there is no moisture condensing inside the unit.
- Fuse replacement must be performed by authorized service personnel.
- When the STS is energized, do not open or remove its covers or panels.
- Fans and components should be replaced prior to the recommended end of life cycle.
- You must contact Delta customer service if any of the following events occur.
    1. Any liquid such as water splashes into or on the surface of the unit.
    2. If the unit is dropped or damaged during shipping and handling.
    3. Any conductive powders or metals enter into the unit.
    4. Any fault or alarm occurs.

1.4 Storage Warnings

- Use the original packing materials to pack the STS to prevent any possible damage from rodents.
- If the STS needs to be stored prior to installation, it should be placed in a dry indoor area. The allowable storage temperature is below 80°C (176°F) and relative humidity is below 95%.

1.5 Standard Compliance

- IEC 62310
- EN 50082-1
- ICC-ES AC156 Qualification

Chapter 2 : Introduction

2.1 General Overview

The Delta three-phase four-wire STS is designed to provide an automatic and seamless transfer between two independent input power sources to its connected loads without power interruption. The unit will transfer to its alternate source when available if the preferred source is out of the acceptable range set during the startup.

A user-friendly graphical 10" color touch panel is equipped for users to easily operate and clearly understand the STS's status. The redundant design of circuits, power supplies, control units and fans can eliminate any single-point failure, which enhances overall reliability of the unit.

2.2 Technical Specifications

Model		STS 1250 A
Current Rating		1250 A
Input	Nominal Voltage	380, 400, 415 Vac (3Φ4W + G)
	Voltage Range	± 10%
	Frequency Range	47 ~ 53 Hz/ 57 ~ 63 Hz
	Voltage Distortion	Up to 10% THD (with notches and ringing transients)
	Current	1250 A
Output	Voltage	380, 400, 415 Vac (3Φ4W + G)
	Frequency	47 ~ 53 Hz/ 57 ~ 63 Hz
	Overload Capability	101% ~ 125%: 30 minutes 126% ~ 150%: 2 minutes 151% ~ 500%: 0.25 seconds
	Short Circuit Current Withstand	65 KAIC 100 KAIC (option)
	Transfer Time	< 4 milliseconds
	Load Power Factor Range	0.75 to 1.0 (leading or lagging)
	Load Crest Factor	Up to 3.5

Model		STS 1250 A
Display		10” touch panel
Interface	Standard	EPO dry contact × 1 (reserved), Breaker status input dry contact × 6 (reserved), Output dry contact × 6, Input dry contact × 4, Maintenance port × 4, RS-232 port × 2, EMS/ CONSOLE × 1 (reserved), USB port × 1, Network Port × 1
Efficiency	Normal Mode	> 99%
Environment	Storage Temperature	-40 ~ 80°C (-40 ~ 176°F)
	Operating Temperature	0 ~ 40°C (32 ~ 104°F)
	Relative Humidity	95% (non-condensing)
	Operating Altitude	Up to 1,220 m (4002.62 ft)*[1] above sea level without derating.
	Storage/ Transport Altitude	Up to 12,200 m (40026.25 ft) above sea level
	Audible Noise	< 80 dBA *[2]
Physical	Dimensions (W × D × H)	2105 × 911 × 2000 mm (82.87" × 35.87" × 78.74") without terminal protection enclosure 2105 ×911 × 2188 mm (82.87" ×35.87" × 86.14") with terminal protection enclosure
	Weight	2220 kg (4894.26 lb)

NOTE:

1. *[1] When the altitude is above 1,220 m (4002.62 ft), the output current will be derated by 6% for every increase of 300 m (984.25 ft).
2. *[2] At a distance of 1.5 m (4.92 ft) in front of the STS.
3. Please refer to the rating label for the safety certification.
4. All specifications are subject to change without prior notice.

2.3 Package Inspection

During STS transportation, some unpredictable situations might occur. It is recommended that you inspect the STS's exterior packaging. If you notice any damage, please immediately contact the dealer from whom you purchased the unit.

Please check if any item is missing according to the following package list. If the STS needs to be returned, carefully repack the STS and all of the accessories using the original packing materials that came with the unit.

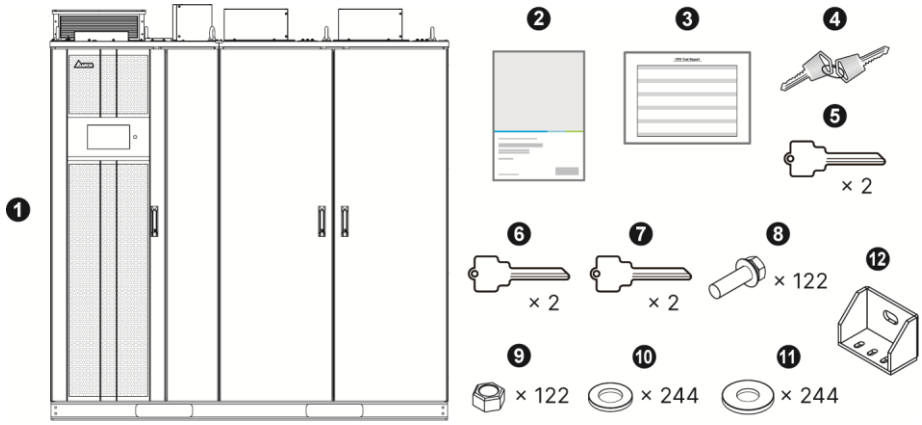

No.	Item	Q'ty
❶	STS	1 PC
❷	User Manual	1 PC
❸	Test Report	1 PC
❹	Key for the Front Doors	2 Copies
❺	Interlock Key (EL24135)	2 Copies
❻	Interlock Key (EL24153)	2 Copies
❼	Interlock Key (EL24315)	2 Copies
❽	M12 Bolt	122 PCS
❾	M12 Nut	122 PCS
❿	Flat Washer	244 PCS

No.	Item	Q'ty
⓫	Belleville Washer	244 PCS
⓬	Top Bracket	4 PCS

2.4 Functions & Features

- Cable entry from top (input & output) and side (load bank).
- Equipped with key-interlock bypass breakers to facilitate seamless manual transfer to manual bypass on either source.
- Equipped with a BMS (Building Management System) port on the top of the STS for easy connection.
- All breakers installed in the STS are front mounted and hot swappable (if the breakers are not in the power-feeding loop).

2.5 Exterior & Dimensions

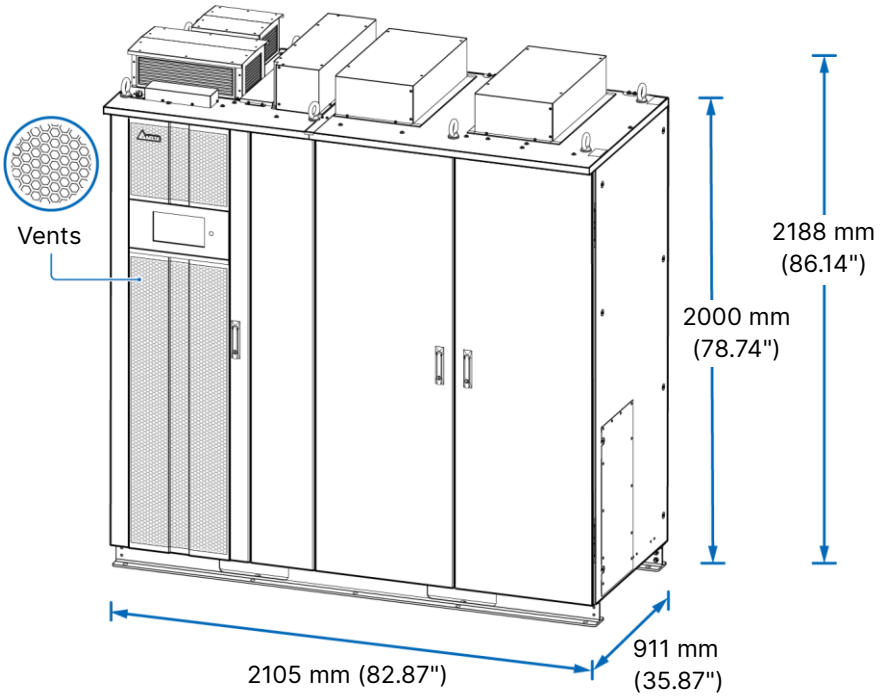

Figure 2-1: STS Exterior & Dimensions

2.6 Front View

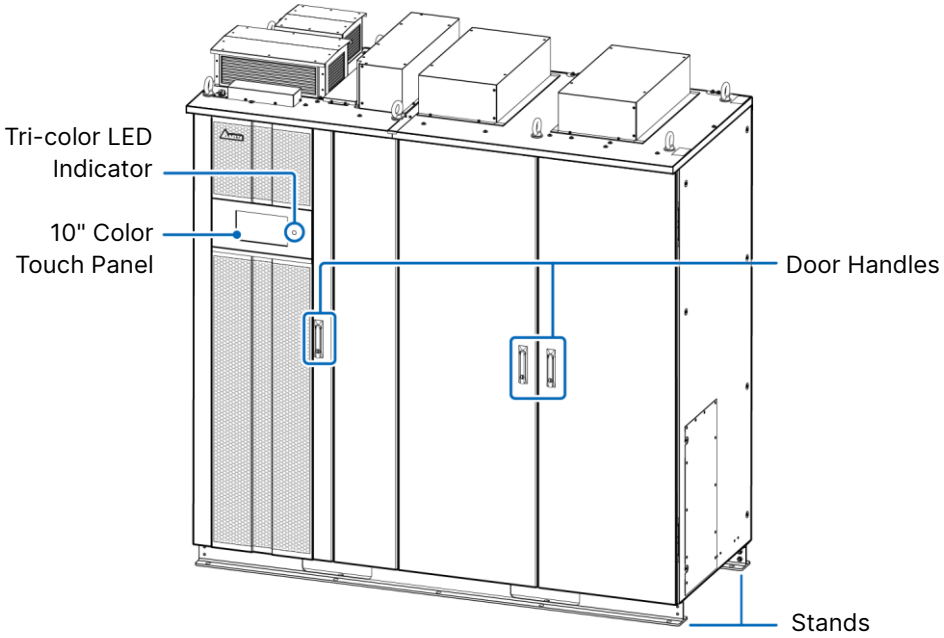

Figure 2-2: Front View

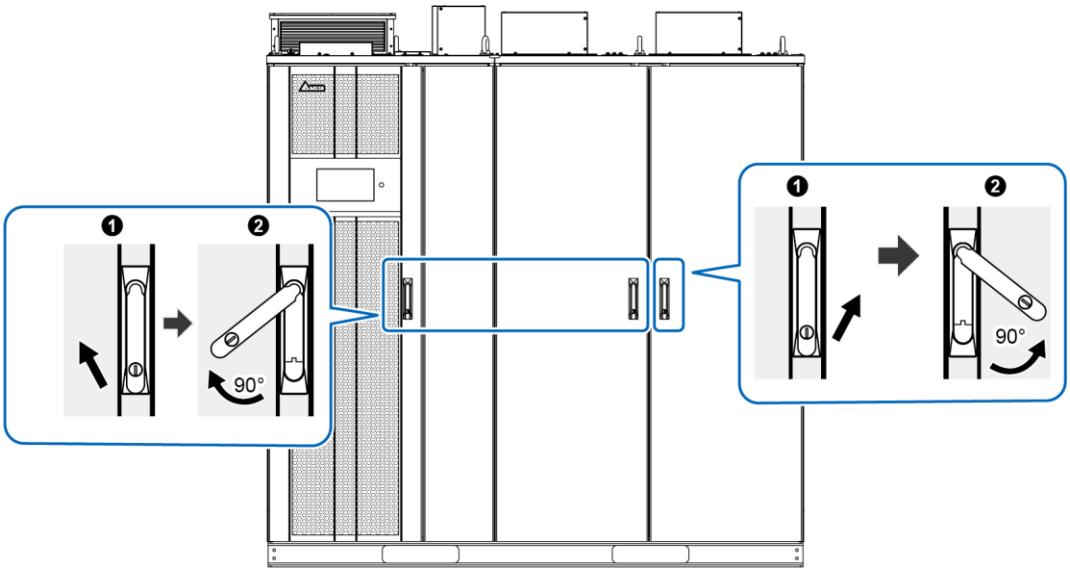

Figure 2-3: How to Open the Front Doors

2.7 Internal View with Front Doors Open and Top Covers Removed

WARNING:

Only authorized Delta engineers or service personnel can perform installation, wiring, panel & cover removal, maintenance and operation. If you want to execute any action mentioned above by yourself, the action must be under the supervision of authorized Delta engineers or service personnel.

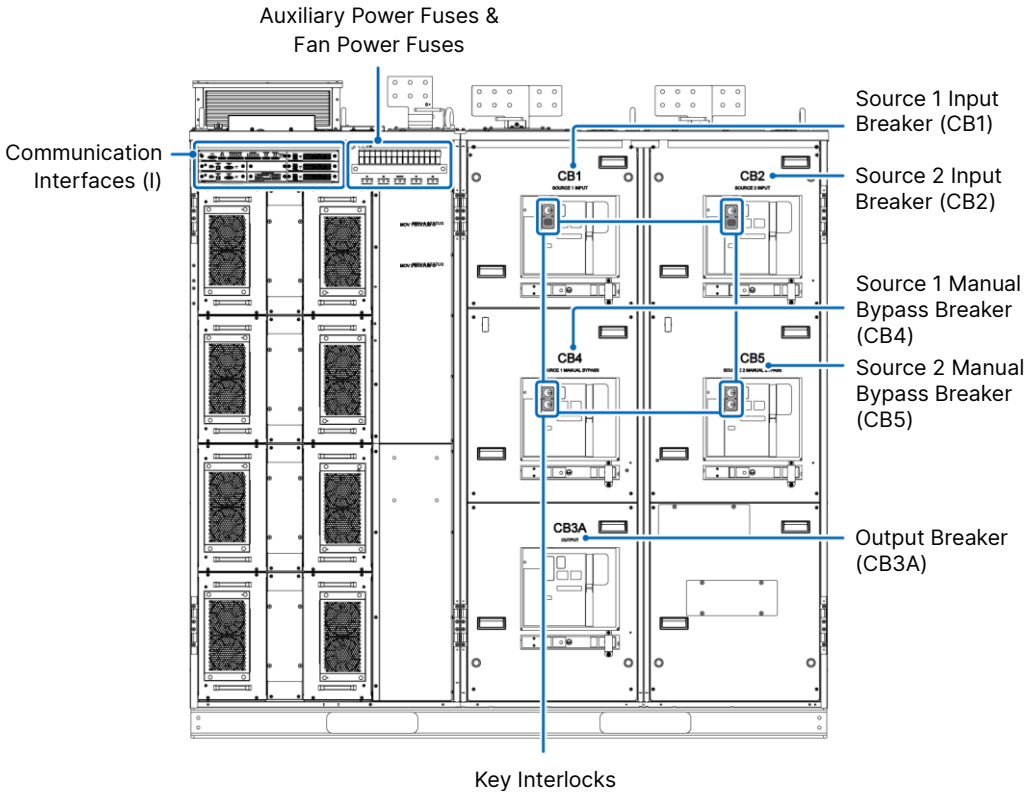

Figure 2-4: Internal View with Front Doors Open

2.8 Internal View with Front Bottom and Side Bottom Covers Removed

WARNING:

Only authorized Delta engineers or service personnel can perform installation, wiring, panel & cover removal, maintenance and operation. If you want to execute any action mentioned above by yourself, the action must be under the supervision of authorized Delta engineers or service personnel.

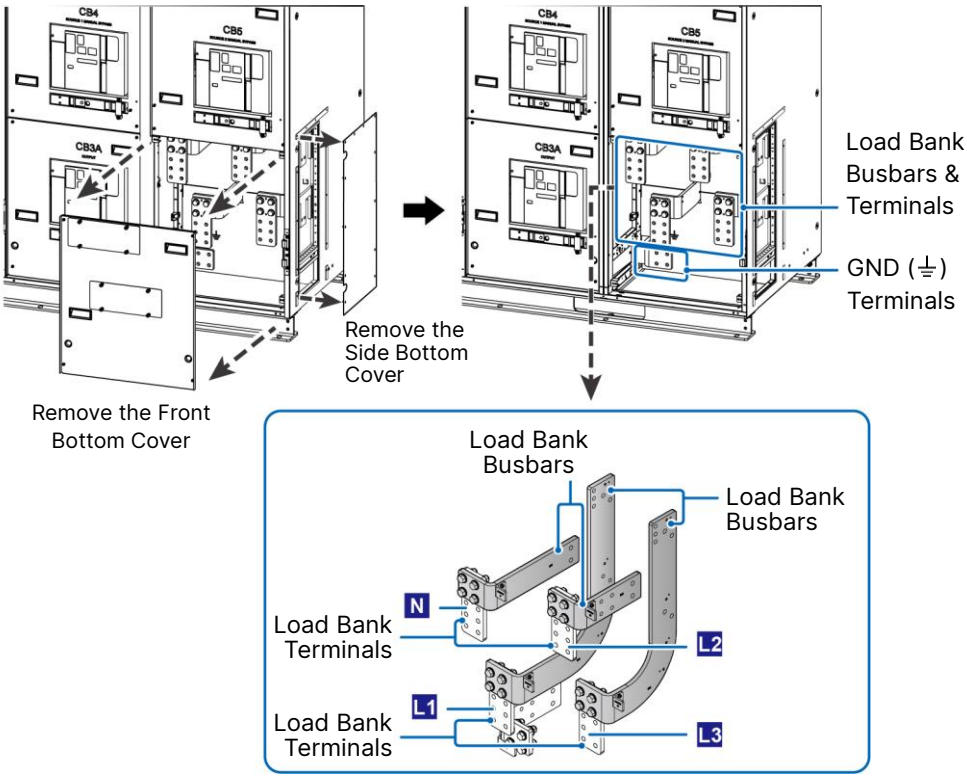

Figure 2-5: Wiring Terminals_ Front Bottom View

2.9 Top View with Three Top Wiring Terminal Covers Removed

WARNING:

Only authorized Delta engineers or service personnel can perform installation, wiring, panel & cover removal, maintenance and operation. If you want to execute any action mentioned above by yourself, the action must be under the supervision of authorized Delta engineers or service personnel.

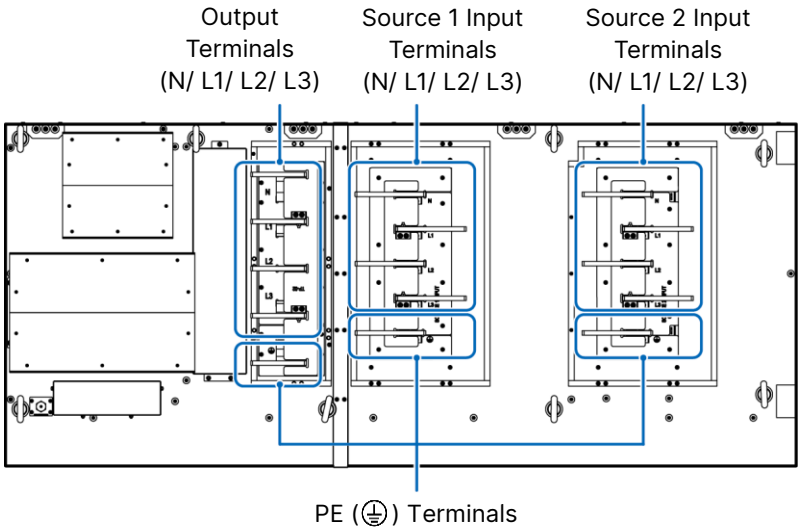

Figure 2-6: Wiring Terminals _ Top View

2.10 Tri-color LED Indicator & Buzzer

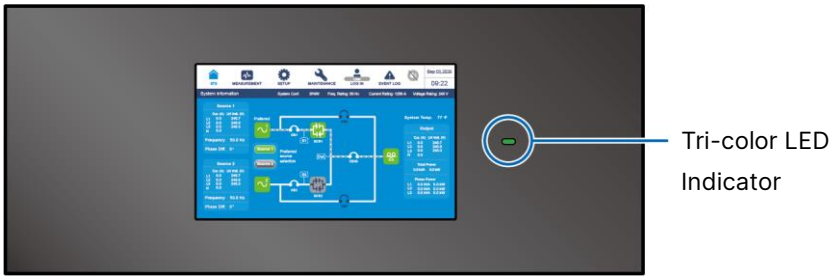

Figure 2-7: Tri-color LED Indicator Location

NOTE:

For information about the 10" color touch panel, please refer to *7. LCD Display & Settings*.

Table 2-1: Tri-color LED Indicator

Tri-color Indicator	Status	Meaning
Green	On	The STS operates normally and supplies power to the critical loads.
Yellow	On	1. A minor or moderate alarm occurs, or 2. The transfer between two input power sources is inhibited, or 3. The bypass breaker (CB4 or CB5) is turned on.
Red	On	A major alarm occurs.

Table 2-2: Buzzer

Alarm	Type	Frequency
Major	Long Beep	It sounds all the time.
Moderate	Fast Beep	It sounds 0.5 seconds every second.
Minor	Slow Beep	It sounds 0.5 seconds every 3 seconds.

Chapter 3 : Operation Modes

The STS is designed with two sets of SCRs (Silicon Controlled Rectifier) to transfer its connected critical loads between two input power sources. In normal operation, the preferred source will feed the critical loads, and the unit will transfer to the alternate source when the preferred source is determined to be out of the voltage or frequency range set in the setting. The “Auto Retransfer” function will retransfer the loads back to the preferred source when the preferred source is back to the acceptable range and meets the transfer delay time. The preferred source can be selected by individual users via the input dry contacts, BMS communication and touch panel. “Voltage”, “Frequency" and “Auto Retransfer” can be set by individual users in the **SETUP** menu.

3.1 Normal

Under normal operating conditions, the STS supplies the loads from the preferred source and monitors the voltage, current and phase of both sources to make sure that both sources are operating within the set tolerances.

3.2 Auto Transfer

When the preferred source is out of the acceptable range and the alternate source is available and within the acceptable range, the STS will automatically transfer the critical loads to the alternate source. Auto retransfer back to the preferred source can be enabled in the setting.

3.2.1 Manual Transfer

To manually transfer to the alternate source, the alternate source must be within the acceptable voltage range, and the phase difference between the two sources must be within the synchronous window. If the two sources are not synchronous, the transfer will be executed only after users confirm such transfer through a pop-up window on the touch screen. The transfer will be an open transition and take less than 4 milliseconds.

Users can initiate a manual transfer by setting the alternate source as the preferred source via the input dry contacts, BMS communication or touch panel. For information about the operation, please refer to *4.1.2.5 Input Dry Contacts, 4.1.4 BMS Port* and *7. LCD Display & Settings*.

3.2.2 Automatic Retransfer

After auto transfer to the alternate source, the STS can use the “Auto Retransfer” function to transfer the loads back to the preferred source when the preferred source is back to an acceptable range and meets the “Retransfer Delay” time. The unit will make five attempts to retransfer back to the preferred source in five minutes. If all five attempts are unsuccessful, the unit will issue an alarm and inhibit any further retransfer attempt. Both the “Auto Retransfer” and the “Retransfer Delay” are set in the control setting (*7.6.3 Control*). The “Auto Retransfer” can also be enabled/ disabled via the BMS (*4.1.4 BMS Port*).

3.2.3 Automatic Retransfer Inhibited

After five failed attempts of auto retransfer in five minutes, the STS will issue an alarm and inhibit any further attempt. This alarm can be cleared after you select the alternate source as the new preferred source or there is a power failure at the alternate source that forces an emergency transfer back to the preferred source.

3.2.4 Emergency Transfer

When the source that is feeding the loads is out of the acceptable range, the STS will automatically perform an emergency transfer to the other source if it is available and within the acceptable range regardless of the phase difference between the two sources.

3.3 Load Current Transfer Inhibited

If the loads of the STS exceed the preset “S1/ S2 I-PK Transfer Lockout” value, it will be regarded as a fault condition or an inrush which has occurred at the output. Under such conditions, the “S1 I-Peak Over” or “S2 I-Peak Over” message will show on the screen, and the manual and automatic transfer will be disabled even if the preferred source’s input voltage is out of the acceptable range. Automatic transfer can still occur when the STS detects an open SCR on the active source.

The “I-PK Reset” can be selected as manual or automatic in the **Control** tab of the **SETUP** menu. In auto reset, the alarm “S1/ S2 I-PK over” will be cleared within 100 milliseconds after the fault condition is cleared. In Manual reset, the alarm “S1/ S2 I-PK over” will not be cleared and the transfer will be inhibited until the user manually clear the alarm in the “Manual I-PK” in the **Control** tab of the **SETUP** menu.

For relevant LCD items, please refer to *7.6.3 Control*.

3.4 SCR Failure

When the STS detects a shorted SCR on the source feeding the loads, the STS will automatically trip the input breaker of the alternate source. When the shorted SCR is detected on the alternate source, the STS will also trip that source’s input breaker.

If the STS detects an open SCR on the source feeding the loads, it will automatically transfer the loads to the alternate source to protect the critical loads.

3.5 Manual Bypass

The bypass breaker (CB4/ CB5) is used to bypass the SCRs for maintenance; under such condition, the input source will directly feed the loads through its bypass breaker. All other-breakers on the unit are used to isolate the power for maintenance.

Chapter 4 : Communication Interfaces

The communication interfaces are located at three different places, on the front of the STS with its front doors open (see *Figure 2-4*), on the top of the STS (see *Figure 4-7*) and at the rear of the touch panel (see *Figure 4-9*).

4.1 Communication Interfaces (I): on the Front of the STS with Its Front Doors Open & on the Top of the STS

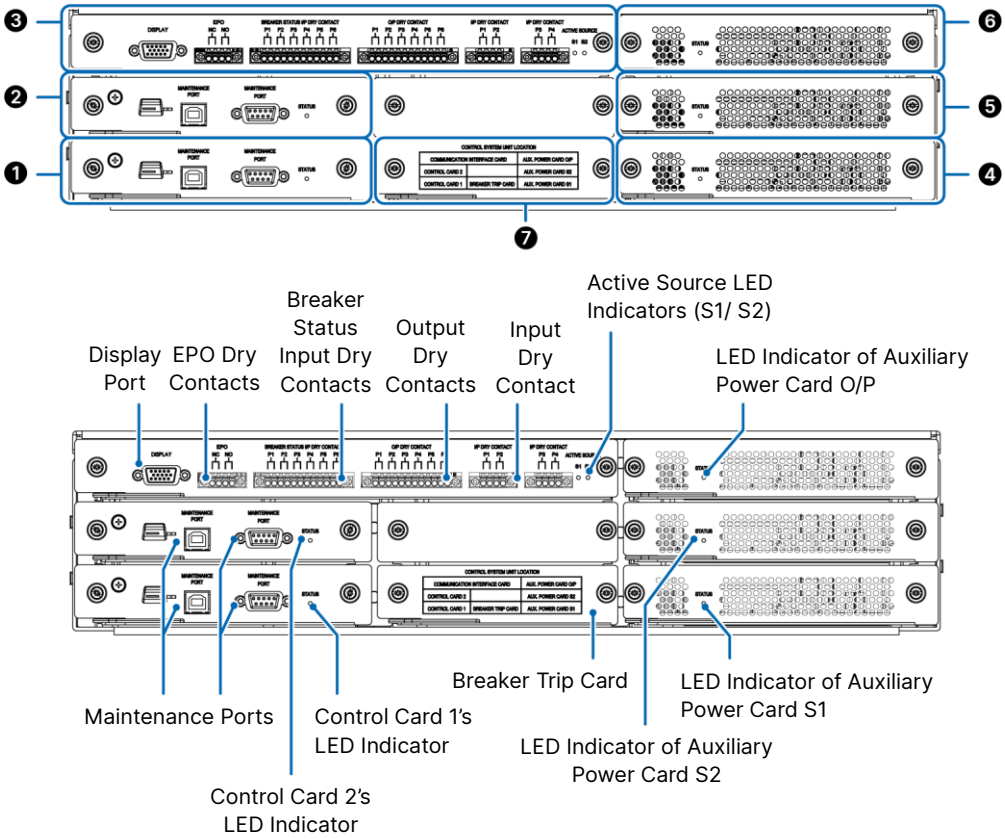

Figure 4-1: Communication Interfaces (I): on the Front of the STS with its Front Doors Open

No.	Item	Q'ty
❶	Control Card 1	1 PC
❷	Control Card 2	1 PC
❸	Communication Interface Card	1 PC
❹	Auxiliary Power Card S1	1 PC
❺	Auxiliary Power Card S2	1 PC
❻	Auxiliary Power Card O/P	1 PC
❼	Breaker Trip Card	1 PC

4.1.1 Control Cards

The STS has two control cards for redundant use. Each card has one LED indicator and two maintenance ports. The maintenance ports are used for maintenance only. Users are not allowed to use them.

The LED indicator indicates the control card's status. Please refer to the figure below.

Status	LED Indicator	
	Green	Yellow
Master	ON	OFF
Slave	OFF	ON
Initialization	N/A	Flash

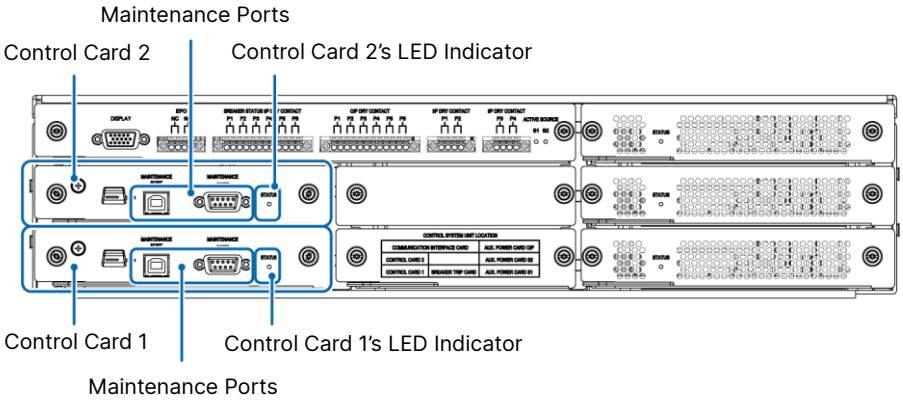

Figure 4-2: Location of the Control Cards

4.1.2 Communication Interface Card

4.1.2.1 Display Port

The display port has been connected to the 10” touch panel.

4.1.2.2 EPO Dry Contacts

The EPO dry contacts are not applicable to this STS model.

4.1.2.3 Breaker Status Input Dry Contacts

The breaker status input dry contacts are not applicable to this STS model.

4.1.2.4 Output Dry Contacts

The STS is equipped with six sets of programmable output dry contacts (P1 ~ P6) that can be assigned events in the **Dry Contact Setting** in the **SETUP** menu. Below is the table of the events available and each can be set as either normally open (NO) or normally closed (NC) state according to your on-site requirements. Please refer to *7.6.4 Dry Contact Setting* for further details. For output dry contacts (P5 ~ P6), they are reserved for internal use.

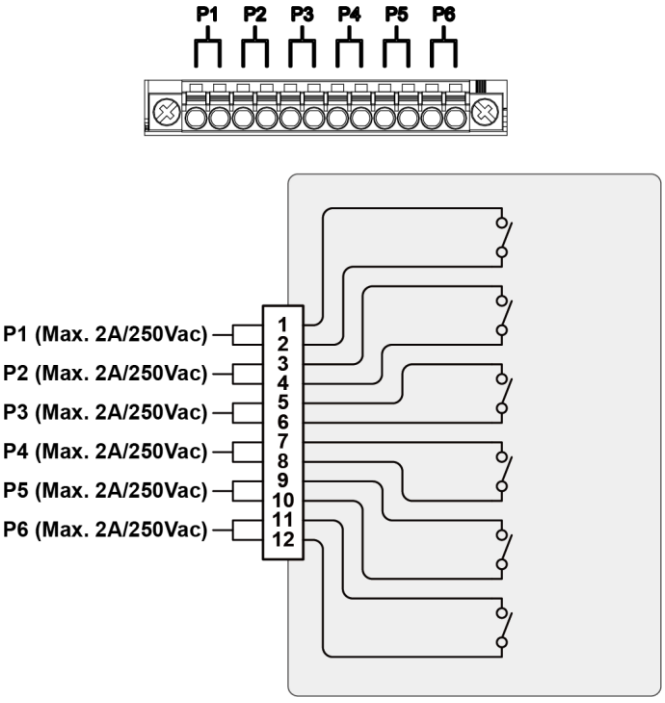

Figure 4-3: Output Dry Contacts & Schematic

No.	Event	Description
1	None	No set-up.
2	S1 Fail	Source 1 is out of the acceptable range.
3	S2 Fail	Source 2 is out of the acceptable range.
4	Bypass CB4 Is Closed & S1 Is Bypassed	The bypass breaker (CB4) is turned on and the source 1's bypass is on.
5	Bypass CB5 Is Closed & S2 Is Bypassed	The bypass breaker (CB5) is turned on and the source 2's bypass is on.
6	Load on S1	The loads are supplied by source 1.
7	Load on S2	The loads are supplied by source 2.
8	Transfer Inhibited	The transfer between two input power sources (source 1 & source 2) are disabled.
9	Over Temperature	Any SCR has an over temperature issue.
10	Summary Alarm	When any STS alarm occurs, the STS will send a signal.

4.1.2.5 Input Dry Contacts

There are four sets of programmable input dry contacts (P1 ~ P4). The input dry contacts allow the STS to receive external signals from peripheral devices and let the STS response accordingly. Please use the touch panel to set each dry contact as normally open (NO) or normally closed (NC). Each input dry contact can be assigned a specific event. There are three events for your selection. For more information, please refer to the table below and *7.6.4 Dry Contact Setting*.

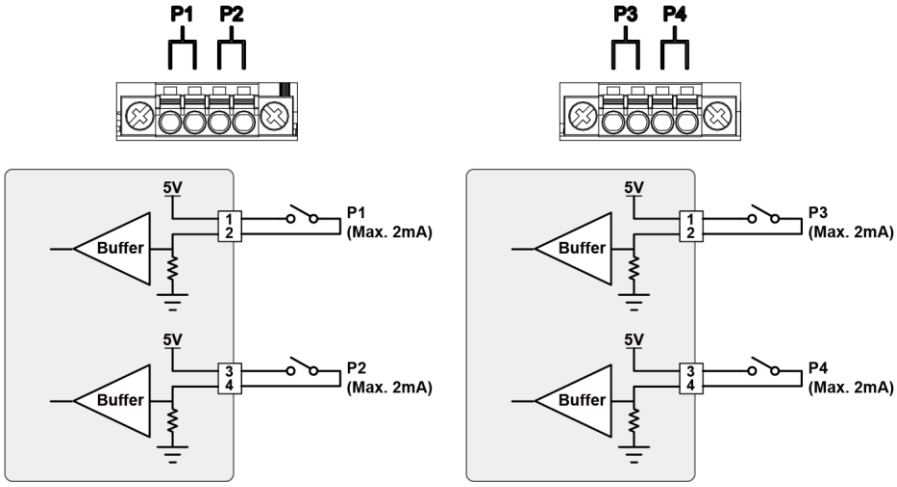

Figure 4-4: Input Dry Contacts & Schematic

No.	Event	Description
1	None	No set-up.
2	Preferred Source	Set source 1 or source 2 as the preferred source.
3	Transfer Inhibited	The STS will not switch its existing power source to the other source even if the existing power source does not supply power any longer.

4.1.2.6 Active Source LED Indicators (S1/ S2)

The LED illuminating green indicates the corresponding active source (source 1 or source 2) is supplying power to the critical loads.

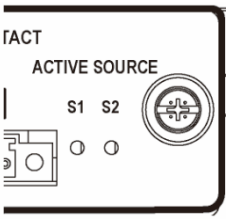

Figure 4-5: Active Source LED Indicators (S1/ S2)

4.1.3 Auxiliary Power Cards

The STS has three auxiliary power cards. Each card has one LED indicator. If the auxiliary power card works normally, its LED indicator will illuminate green. If the auxiliary power card is off or abnormal, its LED indicator will be off.

WARNING:

You can only remove one card at a time for a replacement to avoid power interruption.

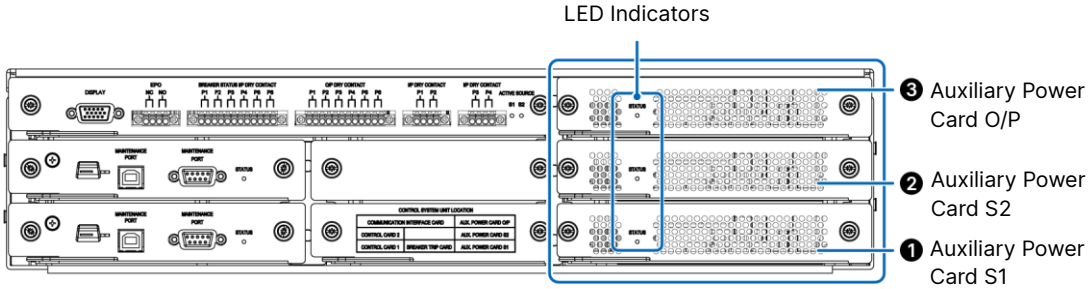

Figure 4-6: Location of the Auxiliary Power Cards

No.	Item	Description
❶	Auxiliary Power Card S1	Power is supplied by source 1.
❷	Auxiliary Power Card S2	Power is supplied by source 2.
❸	Auxiliary Power Card O/P	Power is supplied by output.

4.1.4 BMS Port

The BMS (Building Management System) port is located on the top of the STS. Before connection, remove the protective cap for access to the CAT6 connector. After that, connect the BMS port to your computer to monitor and control the STS.

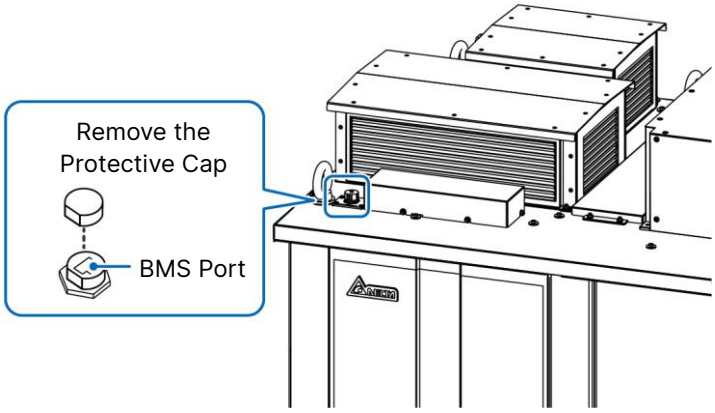

Figure 4-7: BMS Port on the Top of the STS

4.1.5 Breaker Trip Card

The breaker trip card has a driver circuit to trip off the input breaker (CB1 or CB2). Users are not required to operate this card. For further information, please contact Delta service personnel.

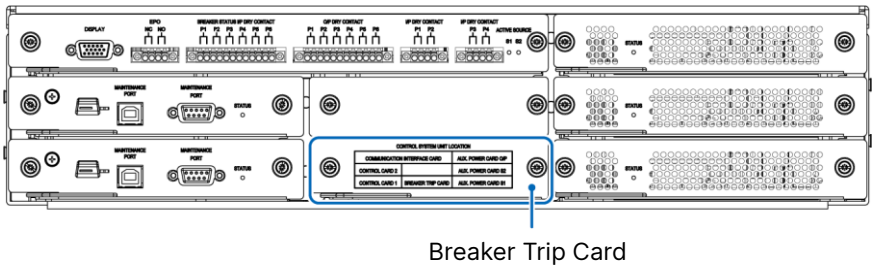

Figure 4-8: Location of the Breaker Trip Card

4.2 Communication Interfaces (II): at the Rear of the Touch Panel

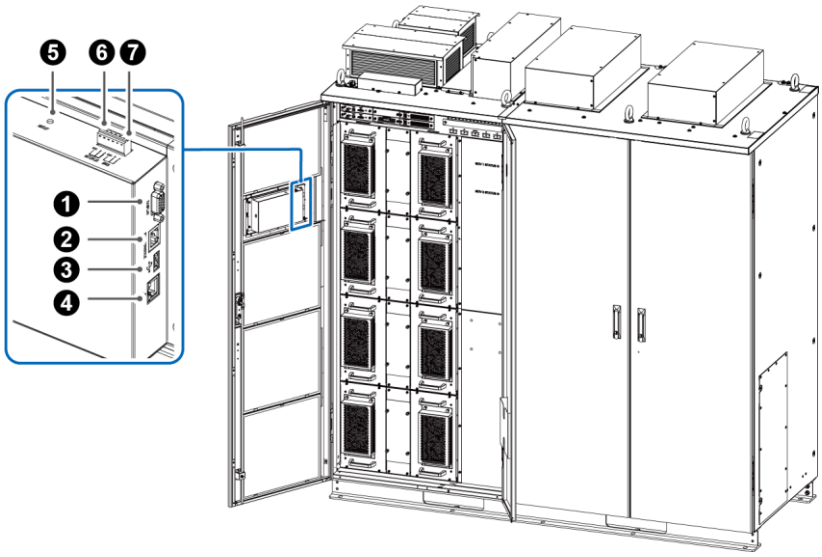

Figure 4-9: Communication Interfaces (II): at the Rear of the Touch Panel

No.	Item	Description
❶	DISPLAY	Touch panel display port connection.
❷	EMS/ CONSOLE	Reserved.
❸	(USB Port × 1)	Connect a user-supplied USB flash drive to the port to (1) upgrade the STS and LCD's firmware and (2) download event logs.
❹	(Network Port)	1. Provision of network communication service (including SNMP, Modbus, TCP, HTTP, HTTPS, etc.). 2. Connect the port to a user-supplied monitoring system.
❺	Reset	Press the **RESET** button to restart the LCD.
❻	MODBUS (RS-485 Port)	1. Provision of Modbus RTU communication service. 2. Connect the port to a user-supplied monitoring system.
❼	BMS	Reserved.

4.3 Cable Routing for the Communication Interfaces

NOTE:

1. Please follow local and national codes to select cable sizes and install proper conduits and bushings for cable protection.
2. Only when installation is completed can you perform wiring.
3. Cable ties are user-supplied and the quantity depends on on-site requirements.

For the cables that need connecting to the communication interfaces, **ONLY** top cable entry is applicable.

Step 1

Make sure that you have followed *5.4 How to Move the STS to a Designated Area* and *Step 1* ~ *Step 3* mentioned in *5.5 Installation* to complete the installation procedures before you perform cable routing for the communication interfaces.

Step 2

Make sure that all breakers are in the **OFF** position and there is no power supplied to the STS.

Step 3

Unscrew the four M5 nuts to remove the top cover.

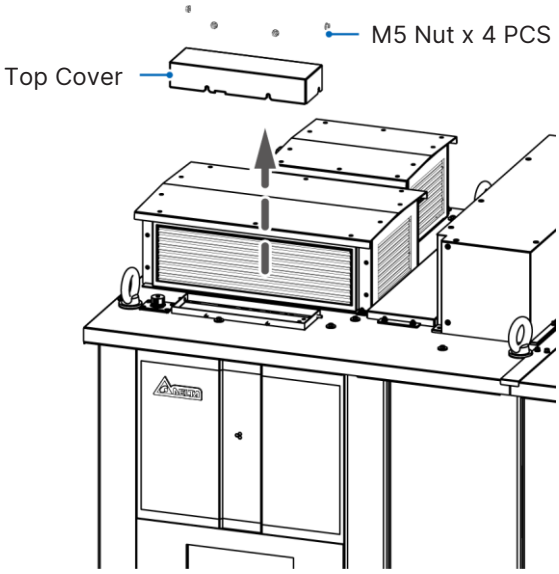

Figure 4-10: Remove the Top Cover

Step 4

Follow *1.1 Installation Warnings* and on-site requirements to drill holes on the top cover and install conduits (user-supplied) on them. The opening size on the top cover should be defined by users. After completion, re-install the top cover. This helps to prevent foreign objects from falling into the cabinet.

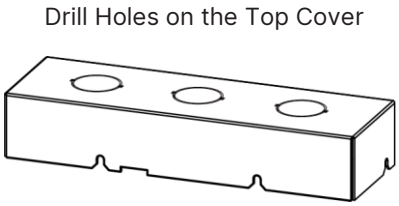

Figure 4-11: Drill Holes, Install Conduits (User-supplied) and Reinstall the Top Cover

Step 5

Open the front doors. Insert the cables from the user-supplied conduits installed on the top of the STS and route the cables through the holes drilled on the top cover. After that, connect cables to the communication interfaces. Please refer to the following figure.

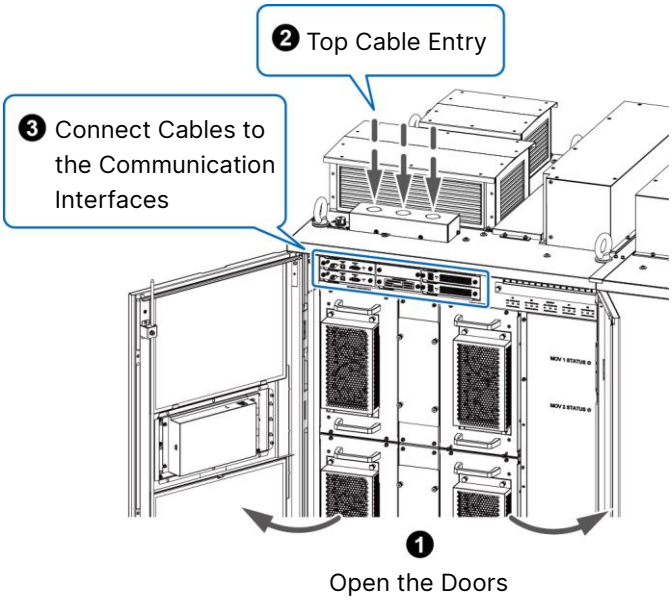

Figure 4-12: Top Cable Entry for the Communication Interfaces

Step 6

For dry contact wiring, please follow the figures below to connect wires to the dry contacts. As the pins of dry contacts vary, the figure below only illustrates 4-pin dry contacts as an example.

Use a flathead screwdriver to press the groove on the terminal block shown, insert a 0.20 ~ 1.31 mm^2 (16 ~ 24 AWG) wire into the wiring hole and release the screwdriver. Please note that the strip length should be 9 ~ 10 mm (0.35” ~ 0.39”).

For other communication interface wiring, please use corresponding cables to plug them into the corresponding ports directly.

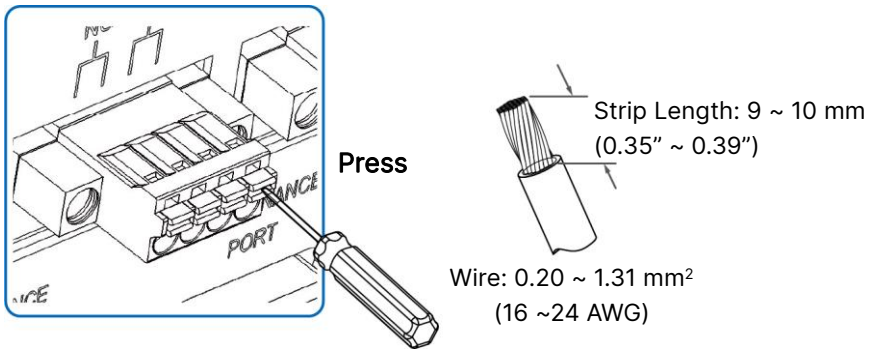

Figure 4-13: How to Connect Wires to the Dry Contacts

NOTE:

For input and output wiring, please refer to *5.6 Wiring*.

Chapter 5 : Installation and Wiring

5.1 Before Installation and Wiring

- Please read this user manual thoroughly before installation and wiring. If there are any questions or concerns, please contact your Delta representative. The STS requires startup and commissioning by an authorized Delta engineer or its service partner. Any unauthorized work performed on the unit will void the warranty.

5.2 Installation Environment

- Install the STS indoors. Do not place it outdoors.
- When moving and installing the STS, please consider its size and weight shown in the table below.

Table 5-1: STS Floor Weight Loading Table

STS Series	
Current Rating	1250 A
Net Weight	2220 kg (4894.26 lb)
Floor Weight Loading	1300 kg/ m^2 (286.6 lb/ ft^2)
Dimensions (W × D × H)	2105 × 911 × 2000 mm (82.87" × 35.87" × 78.74") without terminal protection enclosure 2105 ×911 × 2188 mm (82.87" ×35.87" × 86.14") with terminal protection enclosure

- For cable entry, please reserve sufficient clearance to meet your local and national electrical codes. The STS allows cable entry from the top (input & output) and side (load bank).
- The following clearances are recommended for proper ventilation and maintenance access to the unit.
    1. Keep a distance of 1000 mm (39.37") from the front of the STS.
    2. Keep a distance of 30 mm (1.18") from the rear of the STS.
    3. Keep a distance of 600 mm (23.62") from the top of the STS.
    4. Keep sufficient assembly space at the right side of the STS for other cabinet's installation.

NOTE:

Dust filters are installed at the rear of the STS's left front door prior to shipping. These filters must be inspected and cleaned regularly to maintain proper airflow in the unit.

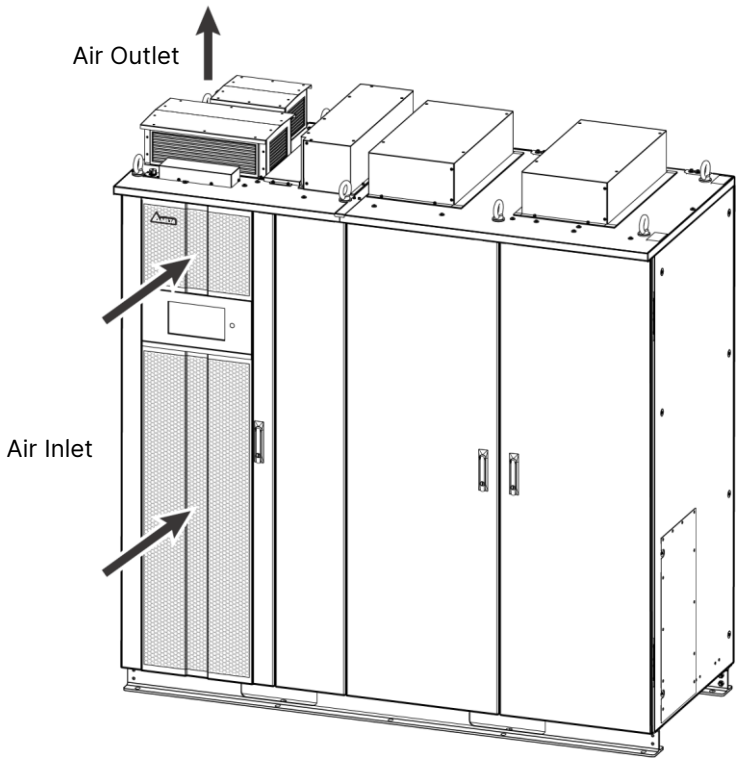

Figure 5-1: Air Inlet & Outlet Direction

WARNING:

1. Do not use air conditioners or similar equipment to blow into the top of the STS.
2. Do not hinder ventilation of the STS.

- The STS produces minimal heat during normal operation. The heat dissipation is about 21,428 BTU/ Hr (6.28 kW).
- Keep the installation area clean. Please note that wiring routes must be hermetic to prevent possible damage from rodents.
- The recommended ambient room condition for normal operation of the STS is temperature around 25°C (77°F) and humidity within 95%. The highest operating altitude is 1000 m (3280.84 ft) above sea level.
- For safety concerns, Delta recommends the following::
  1. Equip surroundings of the installation area with CO_2 or dry powder fire extinguishers.

2. Install the STS in an environment where fireproof materials are used to construct the walls, floors and ceilings.
3. Install the STS on a floor that is made of noncombustible materials.

5.3 Transportation

NOTE:

1. Please strictly follow the instructions below to transport or handle the product.
2. When transporting or handling the product, please wear appropriate protective equipment and follow the safety instructions applicable to the working area.
3. Delta is not liable for any damages caused by improper handling or transportation. This includes failing to follow the instructions in the manual and other applicable regulations and standards (e.g. transportation, occupational health and other safety standards).

Before relocating this equipment to the installation site, follow the instructions below and plan the transportation route.

- The forks must fully bear the load of the equipment with their entire length. During transportation or handling process, keep the load's center of gravity stable and avoid uneven loading.
- Ensure that passages, floors, elevators, or ramps along the transportation route can withstand the weight of the equipment and handling devices. Leave sufficient clearance along the transportation route to avoid collisions and clear all obstacles from the transportation route.

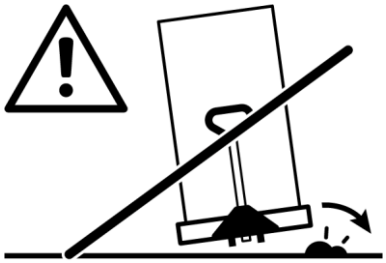

Figure 5-2: Clear All Obstacles from the Transportation Route

- During the transportation or handling process, please pay attention to the stability of the equipment to prevent it from sliding or tipping. When driving down a ramp, move in a backward direction.

Figure 5-3: Pay Attention to the Stability of the Equipment

- Keep personnel clear of the transportation route to avoid accidents.

Figure 5-4: Keep Personnel Clear of the Transportation Route

5.4 How to Move the STS to a Designated Area

WARNING:

1. Only authorized Delta engineers or service personnel can move the STS to a designated area. If you want to execute the action by yourself, the action must be under the supervision of authorized Delta engineers or service personnel.
2. The STS is mounted on the pallet with ten M12 screws, ten spring washers, twenty plain washers and ten M12 nuts. Follow the *Unpacking Guide* attached to the wooden shipping crate to unload the STS from the pallet. Please keep the removed screws, spring washers, plain washers and nuts well because they will be reused as permanent mounting components at its final installation area.

Please follow the steps below:

Step 1

Before installing the STS in a designated installation area, please double-check whether the area's floor weight loading is sufficient to bear the STS and handling equipment to avoid accidents. The weight of the STS is 2220 kg (4894.26 lb) and the floor weight loading is 1300 kg/ m^2 (286.6 lb/ ft^2). For location of the center of gravity (COG), please see the figure below.

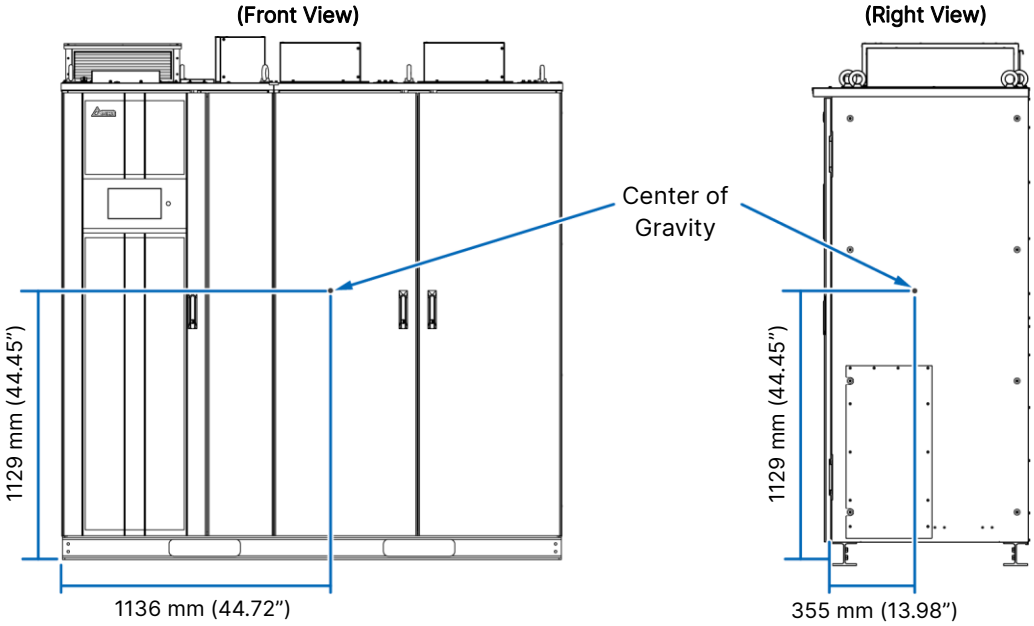

Figure 5-5: Center of Gravity

Step 2

On the top of the STS, there are eight eye bolts which help you to move the STS to the designated area. Use eight slings and one hook (provided by qualified service personal) to hook the eye bolts and lift the STS. Please note that the lifting strap angle must be more than 45° and the swing angle during lifting process must be less than 15°. Please refer to the figure below.

WARNING:

1. Do not transport or handle the cabinet in a horizontal position and always keep the cabinet vertically under all circumstances.
2. The STS must be suspended above the center of gravity.
3. Please refer to the weight of the STS (see *Table 5*-1) and the center of gravity (see *Figure 5-5*) to select the proper lifting tools for crane operation.
4. If users remove the eye bolts themselves, they shall assume all responsibility and liability for any subsequent handling and consequences.

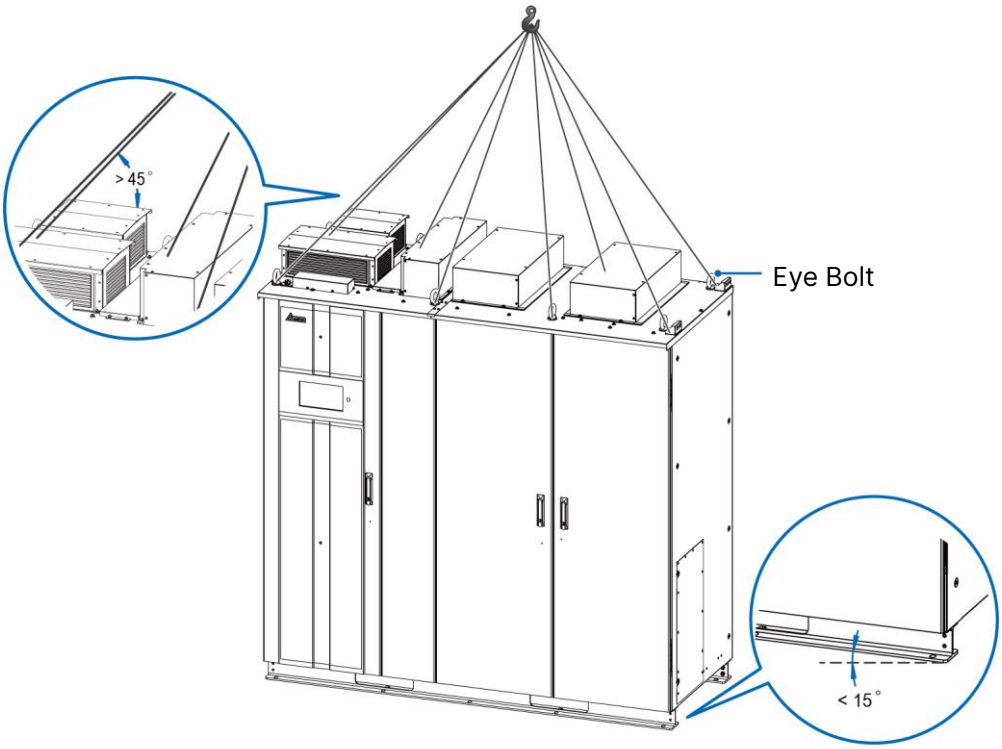

Figure 5-6: Lifting Strap Angle and Swing Angle

5.5 Installation

After following *5.4 How to Move the STS to a Designated Area*, please follow the steps below to install the STS.

Step 1

Confirm the designated floor is level and can support the load bearing of the STS.

Step 2

Follow the figure below to drill holes on the floor where you want to install the STS and use M12 expansion screws (provided by qualified service personnel) to fix the stands at the bottom of the STS on the ground firmly to avoid STS movement.

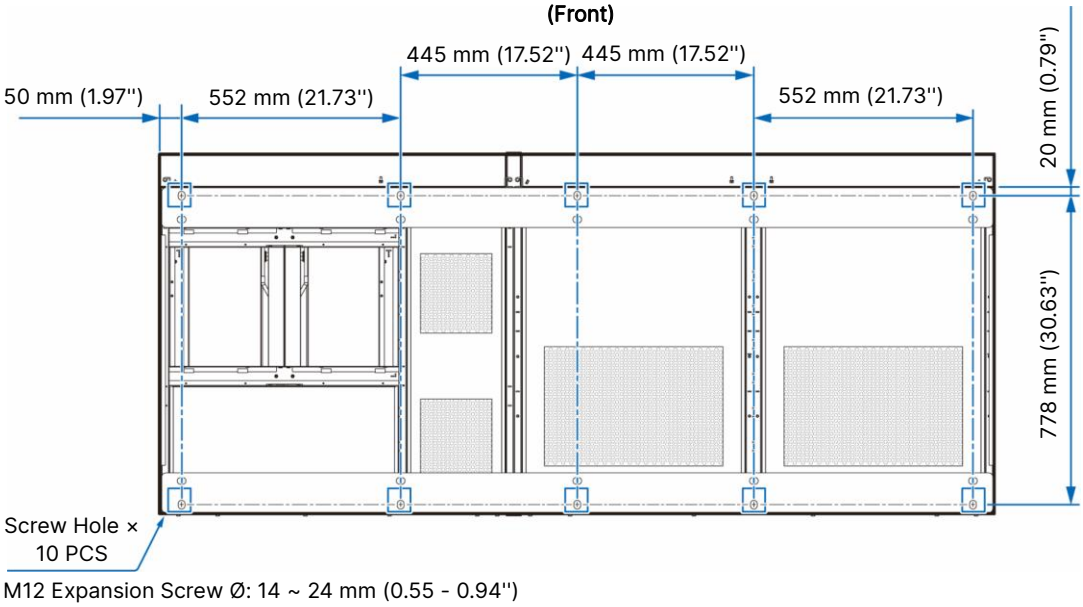

Figure 5-7: Cabinet Floor Fixing Points

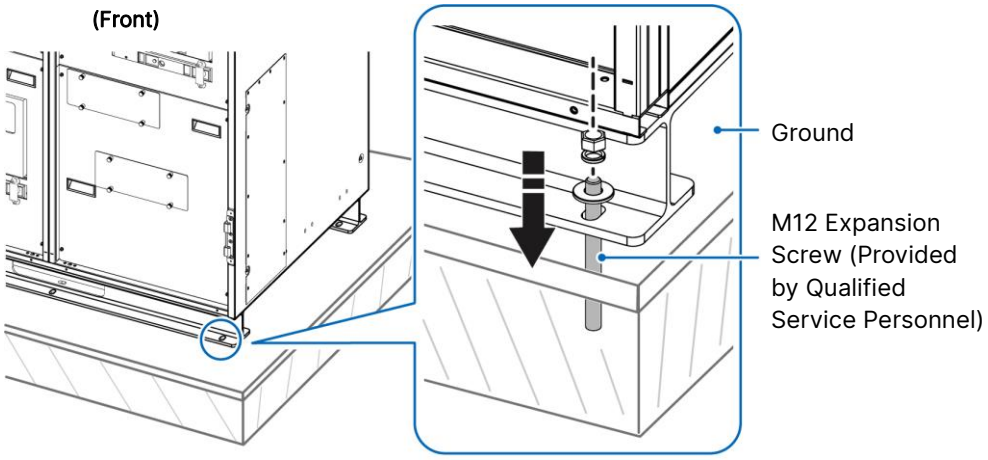

Figure 5-8: Fix the Stands on the Ground

WARNING:

The STS must be properly mounted in accordance with your seismic zone requirement.

Step 3

NOTE:
If there is no need to install the STS against the wall, please skip ***Step 3***.

A. If you want to install the STS against the wall, please remove the twelve M6 screws and rubber washers from the top of the cabinet first.

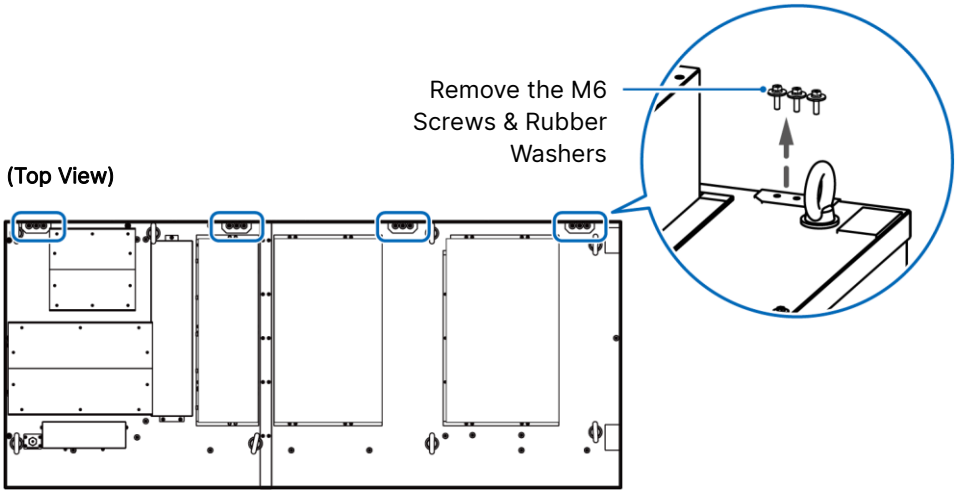

Figure 5-9: Remove the M6 Screws & Rubber Washers

B. Follow the figure below to drill holes on the wall.

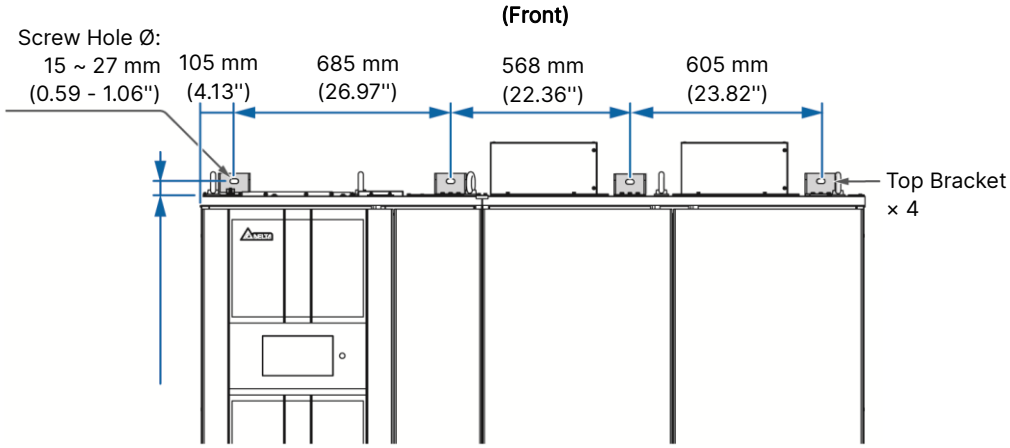

Figure 5-10: Wall Fixing Points

C. ❶ Use sleeve & anchoring bolts (provided by qualified service personnel) to mount the top brackets on the wall. ❷ Use the twelve M6 screws and rubber washers that you just removed from the top of the cabinet to install the four top brackets on the top of the STS cabinet. Please note that the sleeve & anchoring bolts must be properly sized for the installation location.

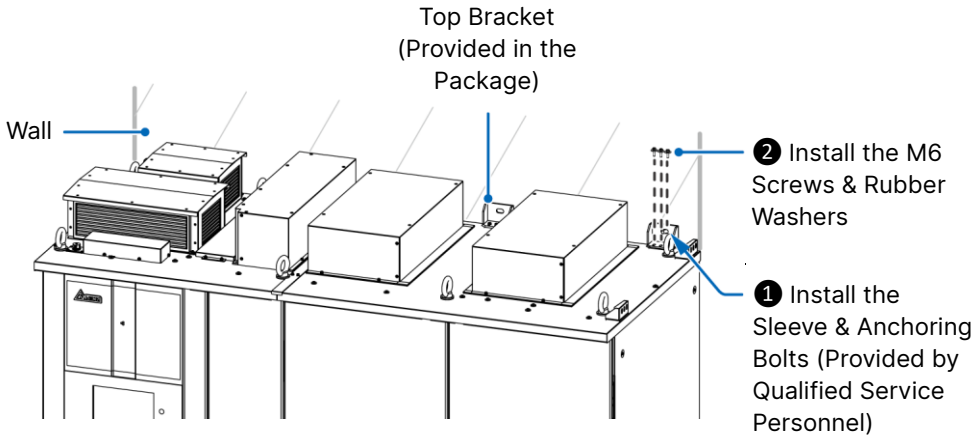

Figure 5-11: Install the STS against the Wall

Step 4

Follow *4.3 Cable Routing for the Communication Interfaces* and *5.6 Wiring* to perform wiring. Please note that these two chapters provide a guideline of Delta's recommendation on cable sizing, lugs and connectors for the unit, but all wiring for the unit must be done in accordance with local and national electric codes.

Step 5

After routing the cables and verifying cable connections, seal or cover the gaps between the cables and the cabinet to avoid foreign materials falling into the STS.

Step 6

Verify that both inputs to the STS have matched phase sequence. Contact your Delta representative to schedule a startup of the STS.

5.6 Wiring

5.6.1 Pre-wiring Warnings

NOTE:

1. Before wiring, please ensure that the STS is properly installed and mounted in the designated area.
2. Read section *5.6 Wiring* thoroughly before starting to perform wiring.
3. When working the unit, please protect the STS from foreign materials falling into the cabinet.

- Before wiring or making any electrical connection, make sure that the power supplied to the input and output of the STS is completely cut off.
- Check if the size, diameter and phase are correct for each cable connecting to the STS. Please refer to *Table 5-2*.

NOTE:

Table 5-2 is based on the unit of 380/ 400/ 415V input and 1250A output; verify this information with the nameplate of the unit. If there is any discrepancy, please contact your Delta representative.

Table 5-2: Specifications of Input/ Output Cables & Breakers

STS Series			
Current Rating			1250 A
Input (Source 1 & Source 2)	Rated current		1250 A
	Recommended cable size	(L1/ L2/L3/ N)	150 mm^2 × 5 PCS (300 kcmil × 5 PCS)
		(PE)	150 mm^2 × 5 PCS (300 kcmil × 5 PCS)
	Maximum cable size	(L1/ L2/ L3/ N)	300 mm^2 × 4 PCS (600 kcmil × 4 PCS)
		(PE)	300 mm^2 × 4 PCS (600 kcmil × 4 PCS)
	Maximum cable lug width Screw size/ Cable lug inner diameter		46 mm (1.8") M12/ 12.7 mm (0.5")
	Terminal type		UL listed pressure crimp terminal Dual-hole Ø: 12.7 mm (0.5'') Space: 44.5 mm (1.75'')
Output	Rated current		1250 A
	Recommended cable size	(L1/ L2/ L3/ N)	150 mm^2 × 5 PCS (300 kcmil × 5 PCS)
		(PE)	150 mm^2 × 5 PCS (300 kcmil × 5 PCS)
	Maximum cable size	(L1/ L2/ L3/ N)	300 mm^2 × 4 PCS (600 kcmil × 4 PCS)
		(PE)	300 mm^2 × 4 PCS (600 kcmil × 4 PCS)
	Maximum cable lug width		46 mm (1.8")
	Screw size/ Cable lug inner diameter		M12/ 12.7 mm (0.5")

STS Series		
Output (Continued)	Terminal type	UL listed pressure crimp terminal Dual-hole Ø: 12.7 mm (0.5") Space: 44.5 mm (1.75")
Tightening Torque		M12 = 500 ± 20 kgf-cm (433.98 ± 17.36 lb-in)
Input Breaker (CB1)		1250 A
Input Breaker (CB2)		1250 A
Bypass Breaker (CB4)		1250 A
Bypass Breaker (CB5)		1250 A
Output Breaker (CB3A)		1250A

NOTE:

1. Please follow National Electrical Code (NEC) and local regulations for proper conduits, bushings, cable sizing and protective devices.
2. When wiring, use copper conductor. Copper wires with PVC material and temperature resistance up to 105°C (221°F) are suggested.

- The two input sources must match the phase sequence.
- The STS's PE terminals (⏚) must be grounded. Please use ring-type terminals when wiring.

WARNING:

Wrong wiring will cause damage to the STS and electric shock.

5.6.2 Wiring Procedures

NOTE:

Before wiring, ensure that every breaker is in the **OFF** position, read ***5.6 Wiring*** thoroughly and make sure that relevant conditions have been met.

<u>Step 1</u>

The STS allows cable entry from the top (input & output) and side (load bank). Please leave adequate space on the top and the side of the STS to allow cable entry.

Step 2

Refer to *Table 5-3* for information about the wiring terminals.

Table 5-3: STS's Wiring Terminals & Wiring Information

No.	Item	Function
1	Source 1 Input Terminals (L1/ L2/ L3/ N)	Connect the terminals to the preferred or alternate source according to your settings on the LCD.
2	Source 2 Input Terminals (L1/ L2/ L3/ N)	Connect the terminals to the preferred or alternate source according to your settings on the LCD.
3	Output Terminals (L1/ L2/ L3/ N)	Connect the terminals to the critical loads.
4	⏚ PE (protective earth) Terminals	Protective earthing for protection against electrical shock in case of fault*[1]. The terminals must be connected to the main earth.
5	⏚ GND (ground) Terminals	The terminals are used to ground the devices which are associated with STS operation.

NOTE:

*[1] The PE (protective earth) connection ensures that all exposed conductive surfaces are at the same electric potential as the Earth to avoid the risk of electrical shock due to leakage current or an insulation fault.

Step 3

Make sure that all breakers are in the **OFF** position and there is no power supplied to the STS.

Step 4

Follow the figures below to remove the input and output terminal covers.

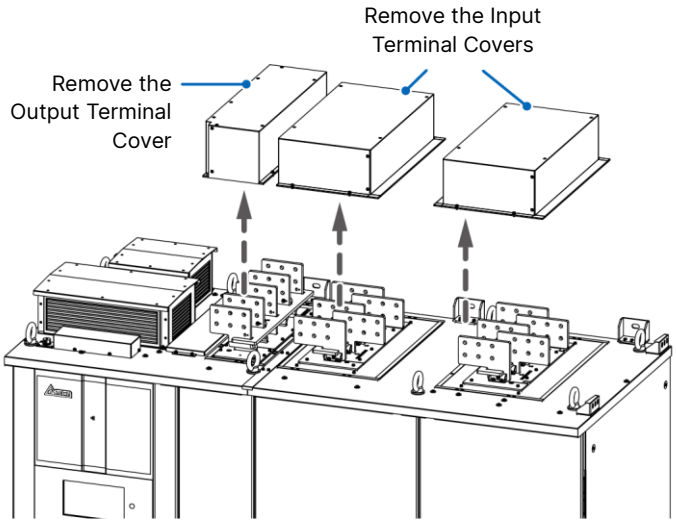

Figure 5-12: Remove the Input and Output Terminal Covers

Step 5

Follow the *Terminal Protection Enclosure Installation Quick Guide* to install the three terminal protection enclosures on the top of the STS. The terminal protection enclosures are optional and you have to purchase them.

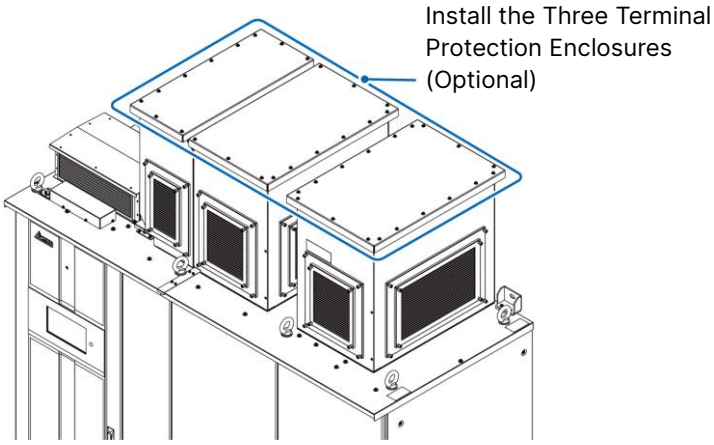

Figure 5-13: Install the Three Terminal Protection Enclosures (Optional)

Step 6

Remove the three terminal protection enclosures' side covers and top covers. After that, follow *1.1 Installation Warnings* and on-site requirements to drill holes on the top covers of the three terminal protection enclosures and install conduits (user-supplied) on them. The opening size on the top covers of the three terminal protection enclosures should be defined by users. After completion, re-install the top covers of the three terminal protection enclosures. This helps to prevent foreign objects from falling into the cabinet.

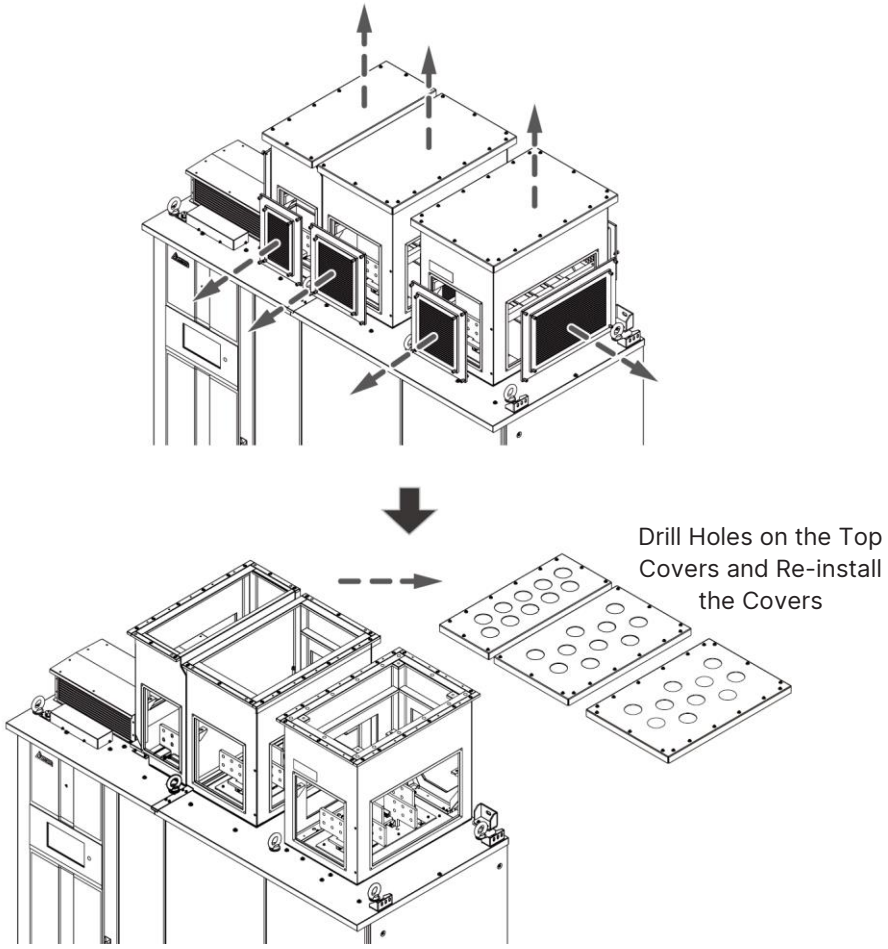

Figure 5-14: Drill Holes, Install Conduits (User-supplied) and Reinstall the Top Covers

Step 7

Insert the wiring cables from the user-supplied conduits installed on the top of the STS and route the cables through the holes drilled on the three terminal protection enclosures' top covers.

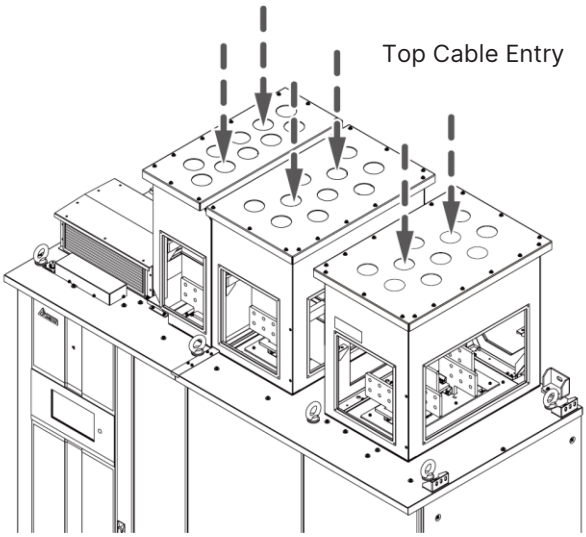

Figure 5-15: Top Cable Entry for the Wiring Terminals

Step 8

Follow *Table 5-2* to select proper terminal type, input and output cables and follow the figure below to use the provided M12 bolts, Belleville washers, flat washers and M12 nuts to connect the cables to the wiring terminals.

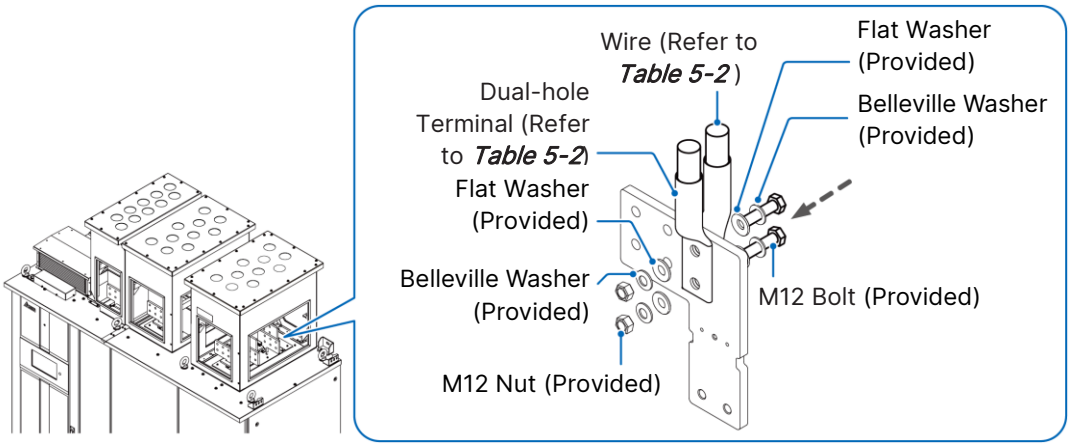

Figure 5-16: How to Connect Wires to the Wiring Terminals

Step 9

After wiring, please re-install the three terminal protection enclosures' front, rear and side covers.

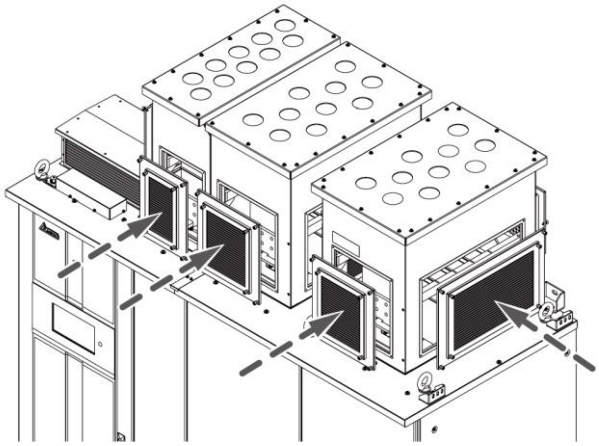

Figure 5-17: Re-install the Front, Rear and Side Covers

NOTE:

For communication interfaces' wiring, please refer to *4.3 Cable Routing for the Communication Interfaces*.

5.6.3 Load Bank Connection

For load bank connection, please remove the right-bottom and side-bottom covers. After removal, you will see the load bank busbars and terminals as shown in *Figure 2-5*. Follow *Table 5-2* to select proper terminal type and cables and route the cables from the lateral side of the STS. For how to connect wires to the wiring terminals, please refer to *Figure 5-16*.

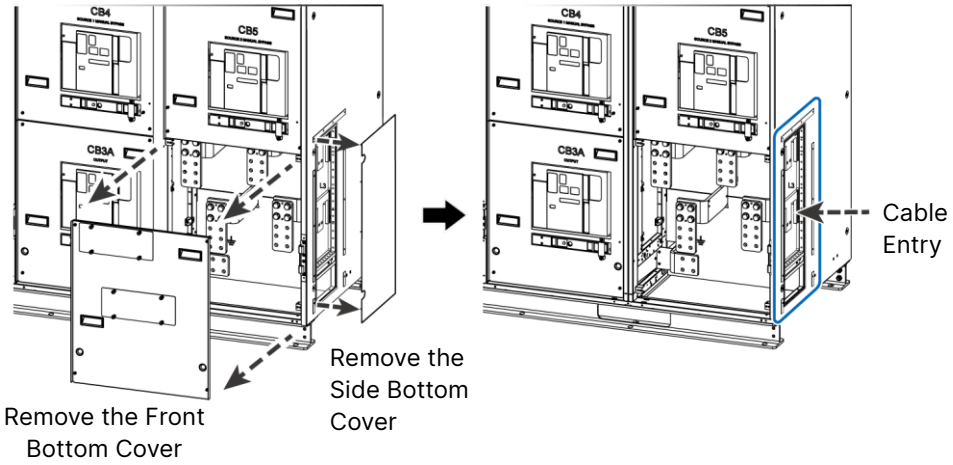

Figure 5-18: Cable Entry from Lateral Side for Load Bank Connection

Chapter 6 : STS Operation

NOTE:

1. All LCD diagrams in the user manual are for reference only. The display is subject to the actual status of the STS.
2. For information about the LCD touch panel and tri-color LED indicator, please refer to *2.9 Tri-color LED Indicator & Buzzer* and *7. LCD Display & Settings*.
3. If the STS model only has one output breaker, please ignore the CB3B description.

6.1 Turn-on Procedures

WARNING:

Do not operate the STS before startup and commissioning are completed by Delta engineers or Delta's approved service partners.

Step 1

Make sure that all breakers are in the **OFF** position.

Step 2

Energize the two input power sources. After connection, the STS comes on automatically.

Step 3

Check the display to confirm that the STS has no issue before proceeding to the next step.

Step 4

Turn **ON** the Output Breakers (CB3A & CB3B) to ensure that the STS can execute the soft-start process.

Step 5

Turn **ON** the Input Breakers (CB1 & CB2). After that, the STS starts supplying power to the loads.

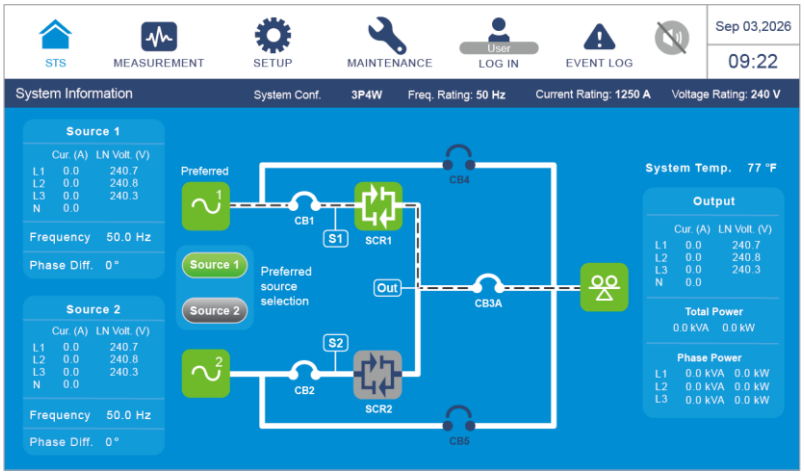

6.2 Turn-off Procedures

Step 1

Turn **OFF** the critical loads connected to the STS.

Step 2

Turn **OFF** the Output Breakers (CB3A & CB3B).

Step 3

Turn **OFF** the Input Breakers (CB1 & CB2).

Step 4

De-energize the two input power sources (no need to remove the cables). After that, the LCD will be off.

6.3 Manual Bypass Procedures

WARNING:

The manual bypass procedures mentioned below must be followed to avoid a potential safety hazard to personnel and the STS.

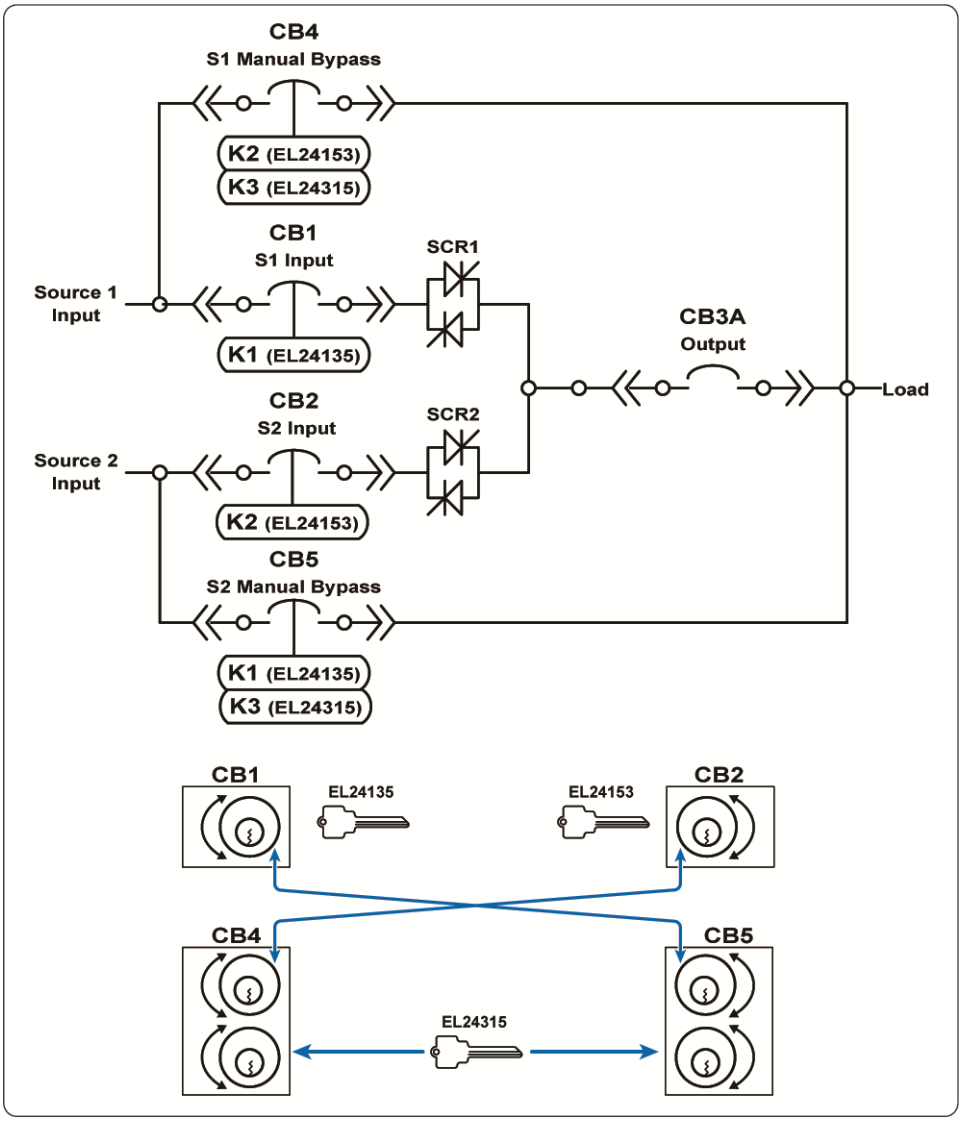

Figure 6-1: STS One-line Diagram & Key Interlock Operation

6.3.1 Manual Bypass Procedures for Source 1

NOTE:

When performing the following procedures, please refer to the key interlock layout shown in *Figure 6-1*.

- **To bypass source 1:**

Step 1

Tap the touch screen to wake up the display and verify that source 1 is the preferred source.

Step 2

Move the interlock key (EL24315) from the CB5 interlock to CB4 interlock.

Step 3

Turn **OFF** source 2's Input Breaker (CB2).

Step 4

Rotate and remove the interlock key (EL24153) from the CB2 interlock.

Step 5

Insert the interlock key (EL24153) into the CB4 interlock to retract the interlock.

Step 6

Turn **ON** the Bypass Breaker (CB4).

Step 7

Verify that the status of the Bypass Breaker (CB4) is closed on the display.

Step 8

Turn **OFF** the two Output Breakers (CB3A & CB3B).

Step 9

Turn **OFF** the Input Breaker (CB1) and rotate the interlock key (EL24135) to lock out the breaker.

Step 10

Secure the key according to on-site LOTO procedures.

Step 11

Open source 1, source 2 and output's auxiliary power fuse holders and take out all fuses (see *Figure 2-4* for the fuse location). After that, the LCD will be off.

- **To return to normal mode:**

Step 1

Re-install the removed fuses and close source 1, source 2 and output's auxiliary power fuse holders (see *Figure 2-4* for the fuse location). After that, the LCD will be on.

Step 2

Tap the touch screen to wake up the display and verify that the Bypass Breaker (CB4) is the only breaker closed.

Step 3

Insert the interlock key (EL24135) into the CB1 interlock to retract the interlock.

Step 4

Turn **ON** the source 1's Input Breaker (CB1).

Step 5

Verify that the Input Breaker (CB1) is closed and the SCR 1 energizes on the display.

Step 6

Turn **ON** the two Output Breakers (CB3A & CB3B).

Step 7

Verify that two Output Breakers (CB3A & CB3B) are closed on the display.

Step 8

Turn **OFF** the Bypass Breaker (CB4) and rotate the interlock key (EL24153) to lock the breaker.

Step 9

Remove the interlock key (EL24153) from the CB4 interlock.

Step 10

Insert the interlock key (EL24153) into the CB2 interlock and retract interlock.

Step 11

Turn **ON** the Input Breaker (CB2) breaker.

Step 12

Check the status of source 2 and CB2 on the display. If everything is correct, the LCD will show as follows.

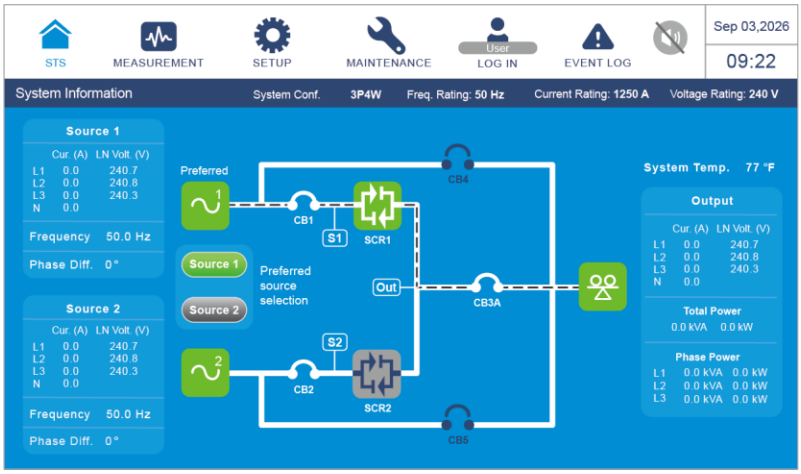

6.3.2 Manual Bypass Procedures for Source 2

NOTE:

When performing the following procedures, please refer to the key interlock layout shown in *Figure 6-1*.

- **To bypass source 2:**

Step 1

Tap the touch screen to wake up the display and verify that source 2 is the preferred source.

Step 2

Move the interlock key (EL24315) from the CB4 interlock to CB5 interlock.

Step 3

Turn **OFF** source 1's Input Breaker (CB1).

Step 4

Rotate and remove the interlock key (EL24135) from the CB1 interlock.

Step 5

Insert the interlock key (EL24135) into the CB5 interlock to retract the interlock.

Step 6

Turn **ON** the Bypass Breaker (CB5).

Step 7

Verify that the status of the Bypass Breaker (CB5) is closed on the display.

Step 8

Turn **OFF** the two Output Breakers (CB3A & CB3B).

Step 9

Turn **OFF** the Input Breaker (CB2) and rotate the interlock key (EL24153) to lock out the breaker.

Step 10

Secure the key according to on-site LOTO procedures.

Step 11

Open source 1, source 2 and output's auxiliary power fuse holders and take out all fuses (see ***Figure 2-4*** for the fuse location). After that, the LCD will be off.

- **To return to normal mode:**

Step 1

Re-install the removed fuses and close source 1, source 2 and output's auxiliary power fuse holders (see ***Figure 2-4*** for the fuse location). After that, the LCD will be on.

Step 2

Tap the touch screen to wake up the display and verify that the Bypass Breaker (CB5) is the only breaker closed.

Step 3

Insert the interlock key (EL24153) into the CB2 interlock to retract the interlock.

Step 4

Turn **ON** source 2's Input Breaker (CB2).

Step 5

Verify that the Input Breaker (CB2) is closed and SCR 2 energizes on the display.

Step 6

Turn **ON** the two Output Breakers (CB3A & CB3B).

Step 7

Verify that two Output Breakers (CB3A & CB3B) are closed on the display.

Step 8

Turn **OFF** the Bypass Breaker (CB5) and rotate the interlock key (EL24135) to lock the breaker.

Step 9

Remove the interlock key (EL24135) from the CB5 interlock.

Step 10

Insert the interlock key (EL24135) into the CB1 interlock and retract interlock.

Step 11

Turn **ON** the Input Breaker (CB1) breaker.

Step 12

Check the statuses of source 1 and CB1 on the display. If everything is correct, the LCD will show as follows.

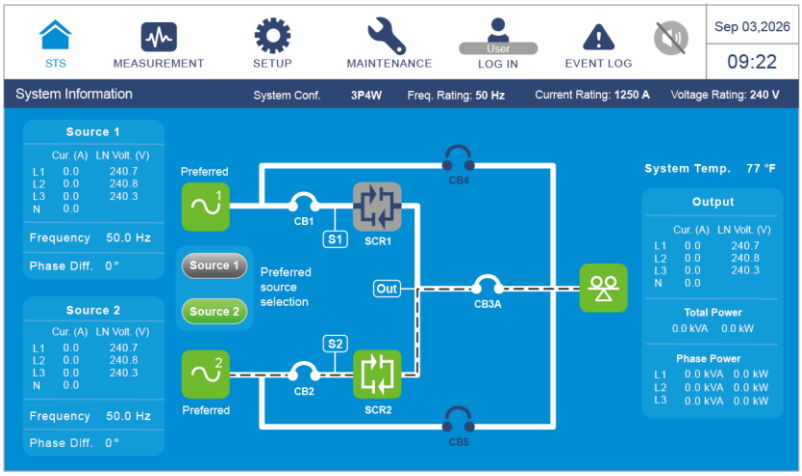

Chapter 7 : LCD Display & Settings

7.1 LCD Display Hierarchy

Please refer to *Figure 7-1* for an overview of all the LCD items. For some of the items marked with an asterisk, they will show up only under certain conditions. Please refer to the note below for more details.

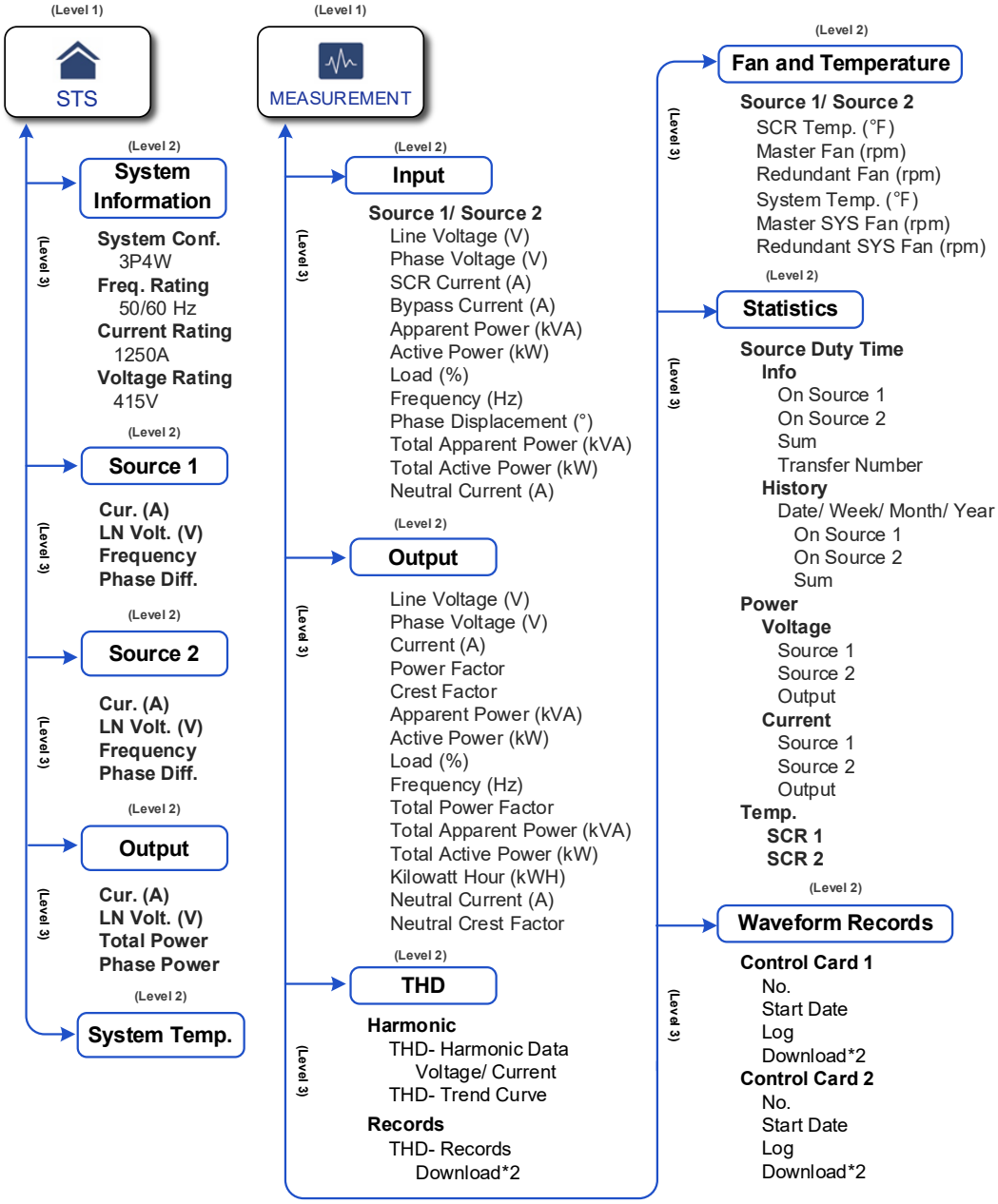

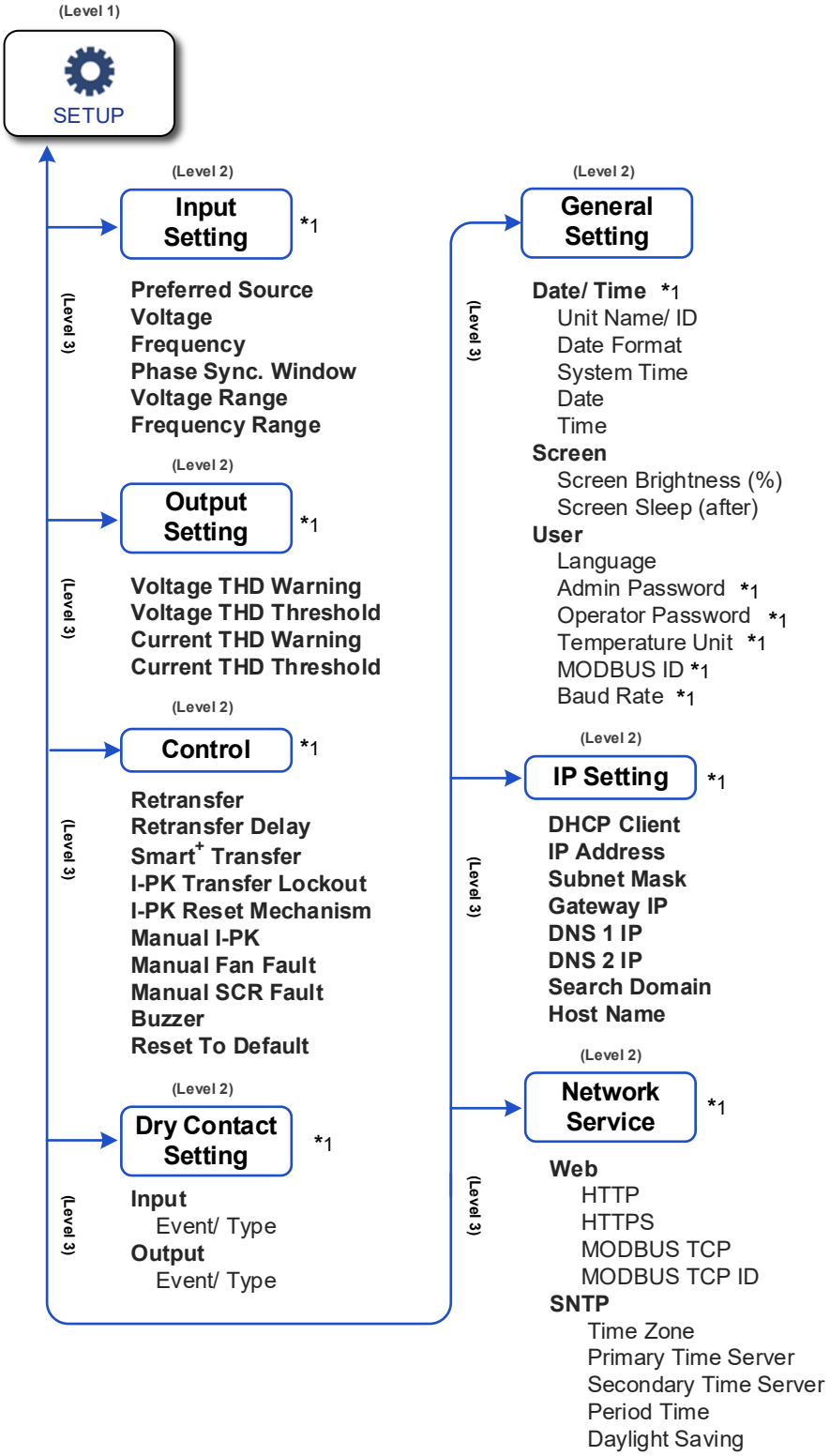
(Level 1)
SETUP
(Level 2)
Input Setting
*1
(Level 3)
Preferred Source
Voltage
Frequency
Phase Sync. Window
Voltage Range
Frequency Range
(Level 2)
Output Setting
*1
(Level 3)
Voltage THD Warning
Voltage THD Threshold
Current THD Warning
Current THD Threshold
(Level 2)
Control
*1
(Level 3)
Retransfer
Retransfer Delay
Smart+ Transfer
I-PK Transfer Lockout
I-PK Reset Mechanism
Manual I-PK
Manual Fan Fault
Manual SCR Fault
Buzzer
Reset To Default
(Level 2)
Dry Contact Setting
*1
(Level 3)
Input
Event/ Type
Output
Event/ Type
(Level 2)
General Setting
(Level 3)
Date/ Time *1
Unit Name/ ID
Date Format
System Time
Date
Time
Screen
Screen Brightness (%)
Screen Sleep (after)
User
Language
Admin Password *1
Operator Password *1
Temperature Unit *1
MODBUS ID *1
Baud Rate *1
(Level 2)
IP Setting
*1
(Level 3)
DHCP Client
IP Address
Subnet Mask
Gateway IP
DNS 1 IP
DNS 2 IP
Search Domain
Host Name
(Level 2)
Network Service
*1
(Level 3)
Web
HTTP
HTTPS
MODBUS TCP
MODBUS TCP ID
SNTP
Time Zone
Primary Time Server
Secondary Time Server
Period Time
Daylight Saving

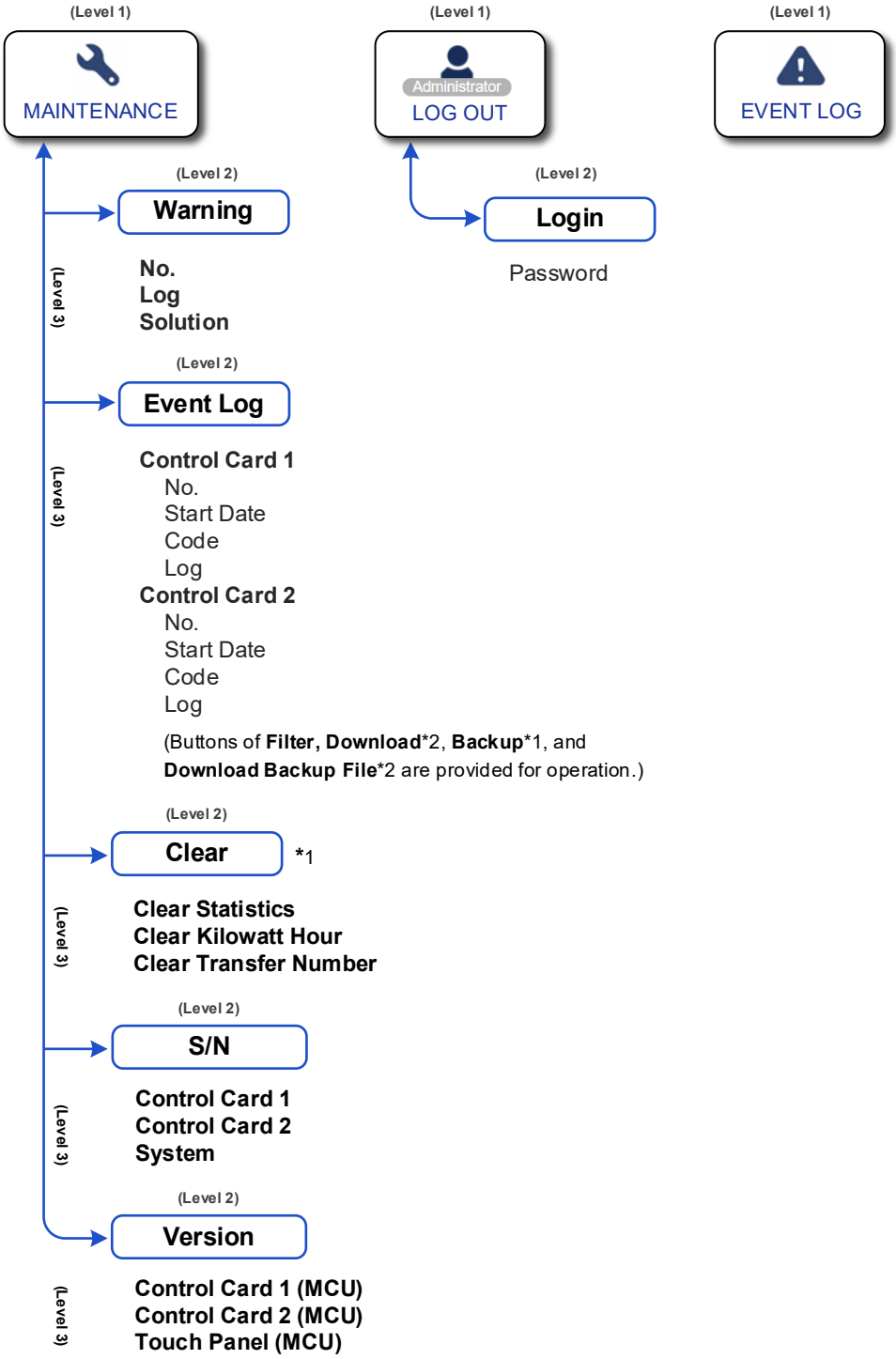

Figure 7-1: LCD Display Hierarchy

NOTE:

1. *[1] To display the item, you have to log in as **Administrator**. Please refer to *7.4 Password Entry*.
2. *[2] The button will show up only after you are logged in as **Administrator** and connect a user-supplied USB flash drive to the USB port (see *Figure 4-9*).
3. The LCD screen diagrams in the user manual are for reference only. The actual display depends on the operation situation.

7.2 How to Turn on the LCD

After the input power is connected, the LCD will be on.

7.3 Introduction of Touch Panel and Function Keys

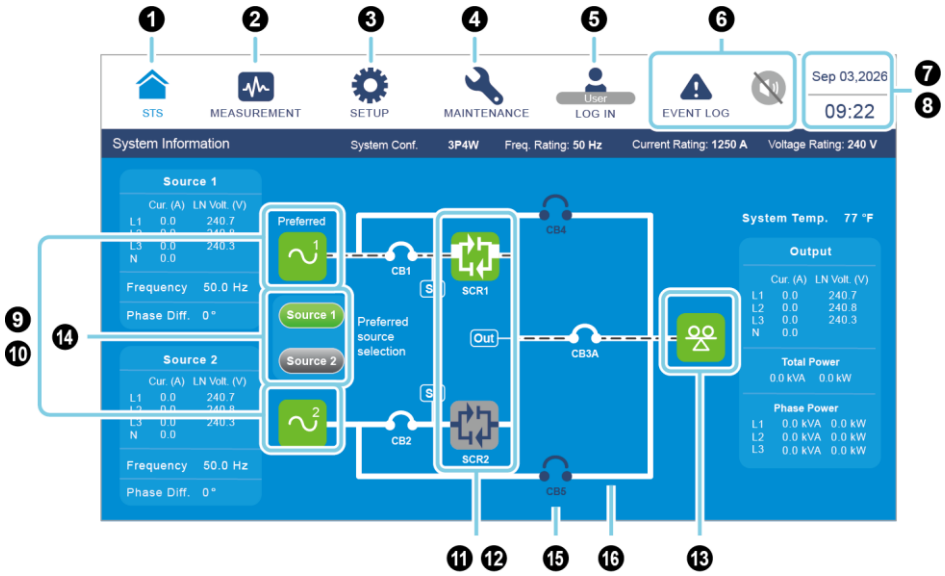

No.	Icon/ Text	Button Function (Yes or No)	Text/ Digital Display (Yes or No)	Symbol Display (Yes or No)	Description
❶	STS	✓	✓	-	Tap the button to go back to the **Main Screen**. The name (STS) below the icon ( ) can be changed; please go to SETUP → **General Setting** → **Unit Name/ ID**.
❷	MEASUREMENT	✓	-	-	Tap the button to open the measurement menu. For the menu items, refer to *Figure 7-1*.
❸	SETUP	✓	-	-	Tap the button to open the setup menu. For the menu items, refer to *Figure 7-1*. For details, refer to *7.6 STS Settings*.
❹	MAINTENANCE	✓	-	-	Tap the button to open the maintenance menu. For the menu items, refer to *Figure 7-1*. For details, refer to *7.7 System Maintenance*.
❺	User LOG IN	✓	-	✓	It indicates **User** login status. Tap the icon to change the login permission. Please refer to *7.4 Password Entry*.
	Administrator LOG IN	✓	-	✓	It indicates **Administrator login status**. Tap the icon to change the login permission. Please refer to *7.4 Password Entry*.

No.	Icon/ Text	Button Function (Yes or No)	Text/ Digital Display (Yes or No)	Symbol Display (Yes or No)	Description
❻	EVENT LOG	✓	-	✓	1. Historical event screen shortcut button (EVENT LOG). 2. When the icon is blue (), it means there is no warning event.
	WARNING 2 WARNING 2	✓	✓	✓	1. Warning screen shortcut button (WARNING 2) & buzzer icon (). 2. When the icon is red (), it indicates that there is a warning event. At this time, the buzzer will sound and the buzzer icon will appear in red (). The numerical value at the upper right of the icon (WARNING 2) indicates the total number of the warning events. To mute the buzzer, tap the icon (), and the icon will become gray (). If there is any new warning event happening afterwards, the buzzer will sound and the icon () will appear and light up again.
❼	Sep 03,2026	-	✓	-	It indicates the date.
❽	09:22	-	✓	-	It indicates the time.
❾	1	-	-	✓	It indicates source 1 status (Green: Normal / Red: Abnormal/ Yellow: Unknown Status). If the source 1 is set as the preferred source, the text '**Preferred**' will appear above the icon.
❿	2	-	-	✓	It indicates source 2 status (Green: Normal / Red: Abnormal/ Yellow: Unknown Status). If the source 2 is set as the preferred source, the text '**Preferred**' will appear above the icon.

No.	Icon/ Text	Button Function (Yes or No)	Text/ Digital Display (Yes or No)	Symbol Display (Yes or No)	Description
⓫		-	-	✓	It indicates SCR 1 status (Green: ON/ Gray: OFF/ Red: Fault).
⓬		-	-	✓	It indicates SCR 2 status (Green: ON/ Gray: OFF/ Red: Fault).
⓭		-	-	✓	It indicates output status (Green: Output/ Red: No Output/ Yellow: Unknown Status).
⓮		✓	-	✓	It indicates the preferred and alternate sources (Green: Preferred Source/ Gray: Alternate Source).
⓯		-	-	✓	It indicates the breaker's status. : Off : On (De-energized) : On (Energized & Source Normal) : On (Energized & Source Abnormal) : On (Unknown Status)
⓰		-	-	✓	It indicates the current status. : De-energized : Energized & Power Flow : Energized : Energized & Source Abnormal : Unknown Status

Other icons on the touch panel are shown in the table below.

No.	Icon	Function
1		It goes to the top page.
2		It goes to the last page.
3		It moves up.
4		It moves down.
5		It goes to the previous page.
6		It goes to the next page.
7		Increase
8		Decrease
9		1. It indicates the page No. 2. It goes to a specific page according to the No. you key in.
10		Delete
11		Capital
12		Space

NOTE:

1. After the backlight is turned off, you can tap the LCD to return to the **Main Screen**.
2. The sleep time for the backlight can be adjusted. Please go to SETUP → **General Setting → Screen → Screen Sleep (after)**.
3. If you are logged in as **Administrator**, you will be logged out when the backlight is off. Tap to wake up the LCD screen, and it will go back to the **Main Screen** in the **User** login status. Even if you set up the backlight in '**Never Sleep**' mode, you will still be logged out after the screen is idle for 5 minutes.
4. The default language is English, which differs according to countries. To change the display language, please go to SETUP → **General Setting → User → Language**.

7.4 Password Entry

1. **Administrator** login requires a password while **User** login does not.
2. Tap User LOG IN → enter the **Administrator** password (contact service personnel for the default password) → the icon Administrator LOG IN appears, indicating the **Administrator** login is successful.
3. To change the **Administrator** password, please go to SETUP → **General Setting → User → Admin Password** (4 digits).

7.5 Measurement

The **Measurement** menu includes information about **Input**, **Output**, **THD**, **Fan and Temperature, Statistics** and **Waveform Records**. Please refer to the following sections for details.

7.5.1 Input

Path: MEASUREMENT → **Input**

Item	Description
Line Voltage (V)	It shows the input line voltage.
Phase Voltage (V)	It shows the input phase voltage.
SCR Current (A)	It shows the input SCR current.

Item	Description
Apparent Power (kVA)	It shows the input apparent power.
Active Power (kW)	It shows the input active power.
Load (%)	It shows the load percentage.
Frequency (Hz)	It shows the input frequency.
Phase Displacement (°)	It shows the input source phase difference.
Total Apparent Power (kVA)	It shows the total input apparent power.
Total Active Power (kW)	It shows the total input active power.
Neutral Current (A)	It shows the input neutral current.

7.5.2 Output

Path: MEASUREMENT → Output

Item	Description
Line Voltage (V)	It shows the output line voltage.
Phase Voltage (V)	It shows the output phase voltage.
Current (A)	It shows the output current.
Power Factor	It shows the output power factor.
Crest Factor	It shows the output crest factor.
Apparent Power (kVA)	It shows the output apparent power.
Active Power (kW)	It shows the output active power.
Load (%)	It shows the load percentage.
Frequency (Hz)	It shows the output frequency.
Total Power Factor	It shows the total output power factor.
Total Apparent Power (kVA)	It shows the total output apparent power.
Total Active Power (kW)	It shows the total output active power.

Item	Description
Kilowatt Hour (kWH)	Please refer to *7.5.2.1 Check Kilowatt-Hour*.
Neutral Current (A)	It shows the output neutral current.
Neutral Crest Factor	It shows the output neutral crest factor.

7.5.2.1 Check Kilowatt-Hour

Path: MEASUREMENT → Output → kWh Icon ( )

Tap the kWh icon ( ) to check the STS's output **kWh statistics** in the following window.

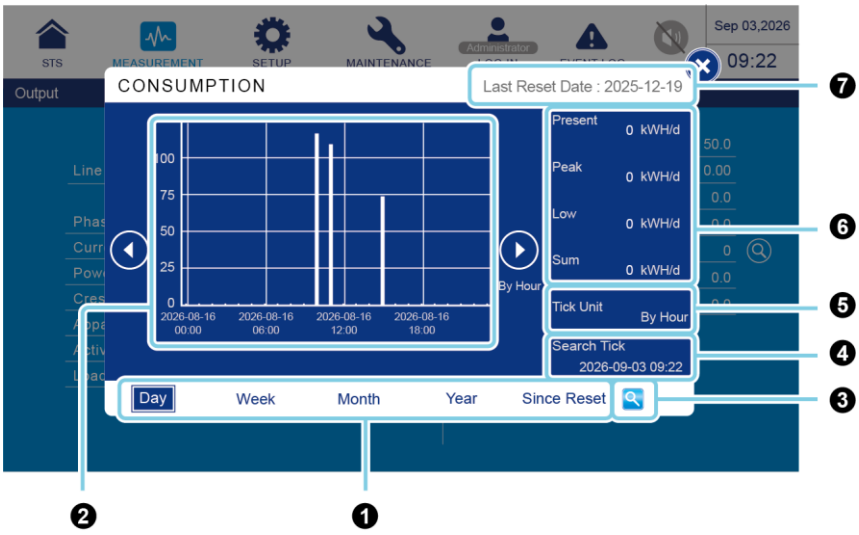

No.	Item	Description
❶	Sheet Tabs (Day/ Week/ Month/ Year/ Since Reset)	Tap the sheet tabs to view the kWh statistics and column charts of different time scales.
❷	Column Chart	1. It shows the STS's output kWh statistics, with time on X-axis and kWh on Y-axis. 2. Tap the column on the chart, and the corresponding piece of data will appear below the chart.
❸	Search Tick Setup Icon ( )	Tap ( ), and you can set the date and time for the '**Search Tick**' to view the corresponding column chart.
❹	Search Tick	It shows the date and time that has been set via ( ).
❺	Tick Unit	The time unit for the X-axis. It can be Hour, Day or Week.
❻	Present/ Peak/ Low/ Sum (kWh/ d)	Regardless of which kWh statistic sheet you choose, the four items indicate today's statistics: the present value/ the highest value (so far)/ the lowest value (so far)/ the sum (so far).
❼	Last Reset Date	The last date when '**Clear Kilowatt Hour**' was executed.

7.5.3 THD

Path: MEASUREMENT → THD

Item	Description
Harmonic	It shows the current and the latest six hours' total output harmonic data (including voltage and current).
Records	It shows the THD records when any of the following situations occur. 1. Power source transfers between source 1 and source 2. 2. Output voltage is abnormal. 3. THD is abnormal. 4. Whenever the STS starts up.

7.5.4 Fan and Temperature

Path: MEASUREMENT → **Fan and Temperature**

Item	Sub Item	Description
Source1/ Source 2	SCR Temp. (°C)	It shows the SCR modules' temperature.
	Master Fan (rpm)	It shows each master fan's speed.
	Redundant Fan (rpm)	It shows each redundant fan's speed.
	System Temp. (°C)	It shows the system temperature.
	Master SYS Fan (rpm)	It shows each master system fan's speed.
	Redundant SYS Fan (rpm)	It shows each redundant system fan's speed.

7.5.5 Statistics

Path: MEASUREMENT → **Statistics**

Item	Sub Item		Description
Source Duty Time	Info.	On Source 1	How long source 1 has supplied power to the loads.
		On Source 2	How long source 2 has supplied power to the loads.
		Sum	How long source 1 and source 2 have supplied power to the loads.
		Transfer Number	How many times transfer between source 1 and source 2 have occurred
	History (Date/ Week/ Month/ Year)	On Source 1	How long source 1 has supplied power to the loads in different time scales.
		On Source 2	How long source 2 has supplied power to the loads in different time scales.
		Sum	How long source 1 and source 2 have supplied power to the loads in different time scales.

Item	Sub Item		Description
Power	Voltage	Source 1	It shows the voltage of source 1 in different time scales.
		Source 2	It shows the voltage of source 2 in different time scales.
		Output	It shows the output voltage in different time scales.
	Current	Source 1	It shows the current of source 1 in different time scales.
		Source 2	It shows the current of source 2 in different time scales.
		Output	It shows the output current in different time scales.
Temp.	SCR 1		It shows the temperature of SCR 1 in different time scales.
	SCR 2		It shows the temperature of SCR 2 temperature in different time scales.

To clear the statistics, please refer to *7.7.3 Clear*.

7.5.6 Waveform Records

Path:

→ Waveform Records

Item	Description
Control Card 1	It shows the control card 1's waveform records.
Control Card 2	It shows the control card 2's waveform records.

7.6 STS Settings

This chapter lists all the STS setting items for your reference. Some items will show up only under certain conditions. Please refer to *7.1 LCD Display Hierarchy* for details.

7.6.1 Input Setting

Path: SETUP → Input Setting

Item	Description
Preferred Source	Set up source 1 or source 2 as the preferred source.
Voltage	Set up source 1 and source 2's nominal voltage.
Frequency	Set up source 1 and source 2's nominal frequency.
Phase Sync. Window	Set up the phase synchronization's range.
Voltage Range (± %)	Set up source 1 and source 2's voltage range.
Frequency Range	Set up source 1 and source 2's frequency range.

7.6.2 Output Setting

Path: SETUP → Output Setting

Item	Description
Voltage THD Warning	Enable or disable the voltage THD warning.
Voltage THD Threshold	Set up the voltage THD threshold.
Current THD Warning	Enable or disable the current THD warning.
Current THD Threshold	Set up the current THD threshold.

7.6.3 Control

Path: SETUP → Control

Item	Description
Retransfer	Enable or disable the power source retransfer function.
Retransfer Delay	Set up the retransfer delay time.
Smart⁺ Transfer	Enable or disable the smart⁺ transfer function.
I-PK Transfer Lockout	Set up the output current's threshold.
I-PK Reset Mechanism	Clear the alarm message (**S1 I-Peak Over**/ **S2 I-Peak Over**) automatically or manually.

Item	Description
Manual I-PK	Clear the alarm message (**S1 I-Peak Over/ S2 I-Peak Over**).
Manual Fan Fault	Clear the alarm message (**Manual Fan Fault**).
Manual SCR Fault	Clear the alarm message (**Manual SCR Fault**).
Buzzer	Enable or disable the buzzer.
Reset to Default	Reset the STS to the factory default settings.

7.6.4 Dry Contact Setting

Path: SETUP → Dry Contact Setting → Input/ Output

Input Dry Contact No.	Event Selection	Type
Input Dry Contact 1 **Input Dry Contact 2** **Input Dry Contact 3** **Input Dry Contact 4**	1. None 2. Preferred Source 3. Transfer Inhibited	Set up NO (normally open) or NC (normally closed) for each input dry contact.

Output Dry Contact No.	Event Selection	Type
Output Dry Contact 1 **Output Dry Contact 2** **Output Dry Contact 3** **Output Dry Contact 4** **Output Dry Contact 5** **Output Dry Contact 6**	1. None 2. S1 Fail 3. S2 Fail 4. Bypass CB4 Is Closed & S1 Is Bypassed 5. Bypass CB5 Is Closed & S2 Is Bypassed 6. Load on S1 7. Load on S2 8. Transfer Inhibited 9. Over Temperature 10. Summary Alarm	Set up NO (normally open) or NC (normally closed) for each output dry contact.

7.6.5 General Setting

Path: SETUP → **General Setting**

Item	Sub Item	Description
Date/ Time	Unit Name/ ID	Set up the unit's name or ID.
	Date Format	Select the date format.
	System Time	Set up the system time.
	Date	Set up the date.
	Time	Set up the time.
Screen	Screen Brightness (%)	Adjust the LCD display brightness (default: 80).
	Screen Sleep (after)	Set up the LCD backlight sleep time (default: 1 minute).
User	Language	Set up the display language (default: English).
	Admin Password	Set up the administrator password (4 digits).
	Operator Password	Set up the operator password (4 digits). **NOTE:** If you are logged in as **User**, you will be required to key in the operator password when you tab the source icon (Source 1/ Source 2) or buzzer icon (/).
	Temperature Unit	Set up the temperature unit (Celsius or Fahrenheit).
	MODBUS ID	Set up the MODBUS ID for the MODBUS port located at the rear of the touch panel.
	Baud Rate	Set up the baud rate for the MODBUS port located at the rear of the touch panel.

7.6.6 IP Setting

Path: SETUP → IP Setting

Item	Description
DHCP Client	Enable or disable the DHCP client.
IP Address	Set up the IP address.
Subnet Mask	Set up the subnet mask.
Gateway IP	Set up the gateway IP address.
DNS 1 IP	Set up the DNS server 1 IP address.
DNS 2 IP	Set up the DNS server 2 IP address.
Search Domain	Set up the search domain.
Host Name	Set up the host name.

7.6.7 Network Service

Path: SETUP → Network Service

Item	Sub Item	Description
Web	HTTP	Enable or disable HTTP service (default: Disable).
	HTTPS	Enable or disable HTTPS service (default: Enable).
	MODUBS TCP	Enable or disable MODBUS TCP service (default: Disable).
	MODBUS TCP ID	Set up the MODBUS ID for the MODBUS TCP (default: 1).
SNTP	Time Zone	Select the time zone.
	Primary Time Server	Set up the primary time server for SNTP.
	Secondary Time Server	Set up the secondary time server for SNTP.
	Period time	Set up the period time to decide the STS and time server's time synchronization frequency.
	Daylight Saving	Enable or disable daylight saving time.

7.7 System Maintenance

7.7.1 Warning

Path 1: MAINTENANCE → **Warning**

Path 2: When there is a warning, the buzzer icon ( ) will light up in red, and the buzzer will sound. Tap the warning icon (WARNING) to enter the **WARNING** screen.

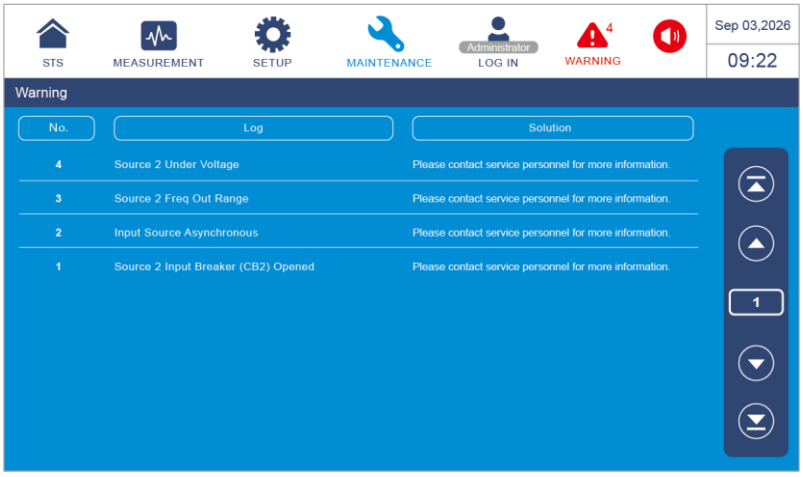

7.7.2 Event Log

Path: MAINTENANCE → **Event Log**

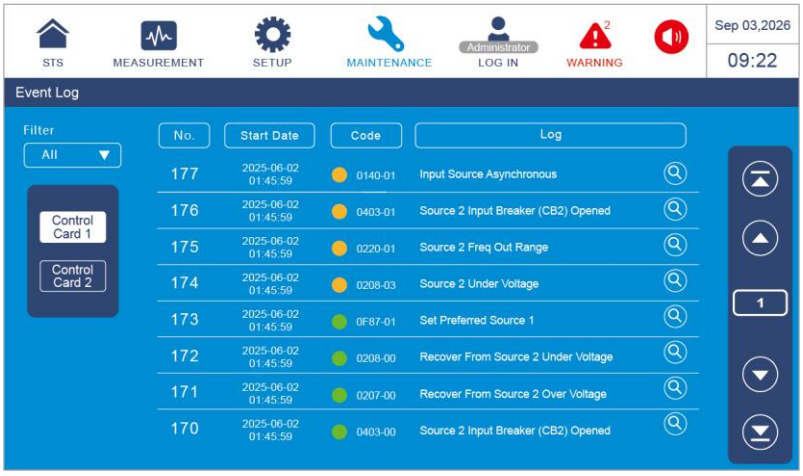

The screen shows the control card 1 and control card 2's event logs. Refer to the table below for button information.

Item	Description
Filter Button	Select the event log type, which includes **All**, **Warning** and **Alarm**.
Backup Button	Back up the event logs (the administrator password is required).
Download Backup File Button	Download the latest backup data. **NOTE:** The **Download Backup File** button will show up only after you are logged in as **Administrator** and connect a user-supplied USB flash drive to the USB port (see *Figure 4-9*).
Download Button	Download the event logs. **NOTE:** The **Download** button will show up only after you are logged in as **Administrator** and connect a user-supplied USB flash drive to the USB port (see *Figure 4-9*).

7.7.3 Clear

Path: MAINTENANCE → **Clear**

Item	Description
Clear Statistics	Clear all statistics.
Clear Kilowatt Hour	Clear all kilowatt hour records.
Clear Transfer Number	Clear all transfer number records.

NOTE:

The records mentioned above are important information for system analysis and maintenance. After you select '**Clear**' and confirm clearance of the item, all the recorded data will be cleared. Do not clear any of them without the consent of qualified service personnel.

7.7.4 S/ N

Path: MAINTENANCE → **S/ N**

Item	Sub Item	Description
S/ N	Control Card 1	Check the control card 1's serial No.
	Control Card 2	Check the control card 2's serial No.
	System	Check the system's serial No.

7.7.5 Version

Path: MAINTENANCE → **Version**

Item	Sub Item	Description
MAIN	Control Card 1_ MCU	Check and update the control card 1's MCU firmware version.
	Control Card 2_ MCU	Check and update the control card 2's MCU firmware version.
	Touch Panel _ MCU	Check and update the touch panel's MCU firmware version.

Chapter 8 : Optional Accessories

No.	Item	Function
1	Dust Filter	It prevents dust from entering into the STS to ensure STS reliability and to prolong product life.
2	Terminal Protection Enclosure	If the wiring is cable type (instead of busway), you must install this optional terminal protection enclosure to prevent electric hazard.

NOTE:

For installation and operation details, please refer to the ***Quick Guide*/ *User Manual*** included in the package of the optional accessory. To purchase the accessory mentioned above, please contact your local dealer or customer service.

Chapter 9 : Maintenance

- STS

  1. STS Cleaning:

     The STS requires proper airflow to maintain its normal operating temperature. All vents and filters should be checked and cleaned regularly to prevent the unit from overheating.

  2. STS Regular Inspection:

     A. Customers should perform monthly check on filters and clean and replace them as needed.

     B. Delta recommends arranging the STS in a regular semiannual maintenance schedule to inspect:

        1) Function of all indicators and LEDs.

        2) Thermal scan of critical connections (once a year).

- Fans

The normal fan life is 5 ~ 7 years. As higher operating temperature will shorten fan life, preemptive replacement of fans is recommended at five-year intervals.

NOTE:

Please ask your local dealer or customer service for more maintenance information. Do not perform maintenance if you are not trained for it.

Chapter 10 : Warranty

Seller warrants this product, if used in accordance with all applicable instructions, to be free from original defects in material and workmanship within the warranty period. If the product has any failure problem within the warranty period, Seller will repair or replace the product at its sole discretion according to the failure situation.

This warranty does not apply to normal wear or to damage resulting from improper installation, operation, usage, maintenance or irresistible force (i.e. war, fire, natural disaster, etc.), and this warranty also expressly excludes all incidental and consequential damages.

Maintenance service for a fee is provided for any damage out of the warranty period. If any maintenance is required, please directly contact the supplier or Seller.

WARNING:

The individual user should take care to determine prior to use whether the environment and the load characteristic are suitable, adequate or safe for the installation and the usage of this product. The User Manual must be carefully followed. Seller makes no representation or warranty as to the suitability or fitness of this product for any specific application.

No. : 501333170101

Version : V 1.1

Release Date : 2026_10_13

Global Headquarter

Taiwan
Delta Electronics Inc.
30 Section 2, Huandong Road, Shanhua District,
Tainan City 74144, Taiwan
T +886 6 505 6565
E ups.taiwan@deltaww.com

Product Security Incident Response Team (PSIRT)
Delta Electronics, Inc.
No. 186, Ruey Kuang Road,
Neihu District Taipei City 114501, Taiwan
E Delta.PSIRT@deltaww.com

URL

Regional Office

Netherland
Delta Electronics (Netherlands) B.V.
Zandsteen 15, 2132 MZ Hoofddorp, The Netherlands
T +31 (0)20 800 3900
E info@delta-emea.com

Poland
Delta Electronics (Poland) Sp. z.o.o.
23 Poleczki St., 02-822 Warszawa, Poland
T +48 22 335 2600
E ups.poland@deltaww.com

Brazil
Delta Electronics Brasil Ltda.
Estrada Velha Rio-São Paulo, 5300 – Eugênio de Melo –
CEP 12247-001 São José dos Campos-SP-Brazil
T +55 12 39322300
E ups.brazil@deltaww.com

Peru
Delta Electronics (Peru) Inc. S.R.L.
Av. Pardo y Aliaga 699 Of. 601, San Isidro Lima, Peru.
T +51 962 834 287
E ups.peru@deltaww.com

China
Delta GreenTech (China) Co., Ltd.
238 Minxia Road, Pudong, Shanghai, 201209 P.R.C
T +86 21 5863 5678
+86 21 5863 9595
E ups.china@deltaww.com

South Korea
Delta Electronics (Korea), Inc.
1511, Byucksan Digital Valley 6-cha, Gasan-dong, Geumcheon-gu,
Seoul, Korea, 153-704
T +82-2-515-5303
E ups.south.korea@deltaww.com

Thailand
Delta Electronics (Thailand) Public Co.,Ltd.
909 Soi 9, Moo 4, E.P.Z., Bangpoo Industrial Estate,
Tambon Phraksa, Amphur Muang-samutprakarn,
Samutprakarn Province 10280, Thailand
T +662 709-2800
E ups.thailand@deltaww.com

Philippines
Eltek Power Inc./ Delta
302 Orient Square Bldg
F. Ortigas JR Road, Barangay
San Antonio, Pasig City
1605 Philippines
E ups.philippines@deltaww.com

Australia
Delta Electronics (Australia) Pty Ltd.
St Leonard's Corporate Centre
Unit 18/39 Herbert Street, St Leonards NSW 2065, Australia
T +61 2 9479 4200
E ups.australia@deltaww.com

UK
Delta Electronics (UK) Ltd.
Eltek House, Unit 1 Cleveland Road, Hemel Hempstead,
Hertfordshire, HP2 7EY, UK
T +44 1442 210805
E sales.gb@eltek.com

U.S.A
Delta Electronics (Americas) Ltd.
46101 Fremont Blvd. Fremont, CA 94538
T +1 510 668 5100
E ups.na@deltaww.com

Colombia
Delta Electronics Colombia SAS
Cra 72 # 95 – 51 Bodega 16, Parque Empresarial
Los Lagartos Bogota DC, Colombia
T +57 317 4052794
E ups.colombia@deltaww.com

India
Delta Electronics India Pvt. Ltd.
Plot No. 43, Sector-35, HSIIDC, Gurgaon-122001,
Haryana, India
T +91 124 4874 900
E ups.india@deltaww.com

Japan
Delta Electronics (Japan), Inc.
2-1-14 Shibadaimon, Minato-Ku, Tokyo, 105-0012,
Japan
T +81-3-5733-1111
E jpstps@deltaww.com

Singapore
Delta Electronics Int'l (Singapore) Pte Ltd.
17 Kallang Junction, #01-01, TRION,
Singapore 339274
T +65 6747 5155
E ups.singapore@deltaww.com

Vietnam
Delta Electronics (Vietnam) Co., Ltd.
6th floor Gems Empire Tower, No. 201 Truong Chinh street,
Phuong Liet Ward, Ha Noi City, Vietnam
T +84 974 766 198
E ups.vietnam@deltaww.com

Indonesia
Delta Electronics International (S) Pte Ltd.
Soho Capital, 30th Fl, Unit SC3009
Jl. Letjend S. Parman kav 28. Jakarta 11470 Indonesia
T + 65 9667 4687
E ups.indonesia@deltaww.com

Smarter. Greener. Together.

5013331701